DRAWING INDEX

SHEET NO.	DRAWING NO.	TITLE
1 OF 10	C-100	COVER SHEET
2 OF 10	C-101	DEMOLITION PLAN
3 OF 10	C-102	OVERALL SITE PLAN
4 OF 10	C-103	SITE PLAN
5 OF 10	C-104	GRADING, DRAINAGE & UTILITIES PLAN
6 OF 10	C-105	LIGHTING PLAN
7 OF 10	C-106	SOIL EROSION AND SEDIMENT CONTROL PLAN
8 OF 10	C-201	STORMWATER BASIN PROFILE & DETAILS
9 OF 10	C-501	CONSTRUCTION DETAILS
10 OF 10	C-502	SOIL EROSION AND SEDIMENT CONTROL NOTES AND DETAILS

200' ADJOINING OWNERS LISTS

Township of Monroe
Office of the Monroe Township Council and Clerk

125 Virginia Avenue
Williamstown, NJ 08094
Office (856) 728-9800 Ext. 214

November 25, 2020

Brian Jillson
Dewberry Engineers, Inc.
1015 Briggs Road, Suite 210
Mount Laurel, NJ 08054

Re: 200 Foot Certified List of Property Owners and Utility List
Block 14301, Lots 4 & 7-10
Monroe Township, Gloucester County, New Jersey

Dear Mr. Jillson:

Per your request, enclosed please find the certified lists of property owners within 200 feet of the above referenced properties and a list of utility companies who service Monroe Township.

Please be advised that the enclosed certified lists of names were prepared by the Gloucester County Office of Assessment. If you have any questions regarding the information provided, please contact their office at (856) 307-6445.

If I can be of any further assistance, please feel free to contact our office.

Sincerely,

Aileen Chiselko, RMC
Municipal Clerk

Enclosures
Cc: Planning Office
File

Gloucester County - Office of Taxation
Certified Adjoining Property List
Created On 11/25/2020

This table is a listing of adjoining properties within 200' of the subject property.

Prepared by: Craig Black, CTA

Selected Parcel(s)

Municipality	Block	Lot	Qualifier	Address	Owner Name	Owner Address	Owner CSZ	Additional Lots
Monroe Township	14301	4	QFARM	1531 N TUCKAHOE RD	LORING INC	749 MULLICA RD	MULLICA HILL, NJ 08062	
Monroe Township	14301	7		1491 N TUCKAHOE RD	LORING INC & JOHNSON, JOHN	212 FISH POND RD	SEWELL, NJ 08080	
Monroe Township	14301	8		N TUCKAHOE RD	WOOD MANAGEMENT LLC	212 FISH POND RD	SEWELL, NJ 08080	
Monroe Township	14301	9		N TUCKAHOE RD	SMITH FRED ORCHARDS INC	212 FISH POND RD	SEWELL, NJ 08080	
Monroe Township	14301	10		1463 N TUCKAHOE RD	SMITH FRED ORCHARDS INC	212 FISH POND RD	SEWELL, NJ 08080	

Adjoining Properties (26)

Municipality	Block	Lot	Qualifier	Address	Owner Name	Owner Address	Owner CSZ	Additional Lots
Monroe Township	14301	1		1531 N TUCKAHOE RD	CROSS KEYS AIRPORT	PO BOX 1649	WILDWOOD, NJ 08260	
Monroe Township	14301	2		1531 N TUCKAHOE RD	CROSS KEYS AIRPORT	PO BOX 1649	WILDWOOD, NJ 08260	
Monroe Township	14301	4.01		603 AIRPORT DR	Q E I	PO BOX 805	WILLIAMSTOWN, NJ 08094	
Monroe Township	14301	4.02		402 AIRPORT DR	RUNWAY PROPERTIES LLC	402 AIRPORT DR	WILLIAMSTOWN, NJ 08094	
Monroe Township	14301	4.03		403 AIRPORT DR	LEWIS PROPERTIES LLC	139 W TOMLIN STATION RD	MICKLETON, NJ 08056	
Monroe Township	14301	4.04		N TUCKAHOE RD	LEWIS PROPERTIES LLC	139 W TOMLIN STATION RD	MICKLETON, NJ 08056	
Monroe Township	14301	5		1499 N TUCKAHOE RD	HARGROVE, WILLIAM	1507 STATE ST	CAMDEN, NJ 08105	
Monroe Township	14301	6		1495 N TUCKAHOE RD	GENESIS BUILDERS LLC	1807 GLASSBORO CROSSKEYS	WILLIAMSTOWN, NJ 08094	
Monroe Township	14301	12		1451 N TUCKAHOE RD	CONNELL, JAMES L	1451 NORTH TUCKAHOE RD	WILLIAMSTOWN, NJ 08094	
Monroe Township	14301	13		1443 N TUCKAHOE RD	CLARK, BERNICE ESTATE	1443 N TUCKAHOE RD	WILLIAMSTOWN, NJ 08094	
Monroe Township	14301	14		1437 N TUCKAHOE RD	FULLARD JR, CLARENCE & SHIRLEY	1437 N TUCKAHOE RD	WILLIAMSTOWN, NJ 08094	
Monroe Township	14301	15		1431 N TUCKAHOE RD	POWELL, WILLIAM W JR	536 ROUN AVE	WILLIAMSTOWN, NJ 08094	
Monroe Township	14301	26		ROUN AVE	CHANDO, TANYA MARIE	105 SUMMIT AVE	SICKLERVILLE, NJ 08081	
Monroe Township	14301	26.01		531 ROUN AVE	FISHER, NOREICE R & MERCADO III, MA	531 ROUN AVE	WILLIAMSTOWN, NJ 08094	
Monroe Township	14401	1		1434 N TUCKAHOE RD	COMFORT DEVELOPMENT GROUP LLC	701 COOPER RD STE 7	VOORHEES, NJ 08043	
Monroe Township	14401	2		1428 N TUCKAHOE RD	JOSEPH, ASHISH M & PALATTY, SONIA	1282 GLASSBORO RD	WILLIAMSTOWN, NJ 08094	
Monroe Township	14401	26		1442 N TUCKAHOE RD	LEIDY, THERESA	1442 NORTH TUCKAHOE RD	WILLIAMSTOWN, NJ 08094	
Monroe Township	14501	15		CROSS KEYS RD	CROSS KEYS AIRPORT INC	PO BOX 1649	WILDWOOD, NJ 08260	
Monroe Township	14501	16		1500 N TUCKAHOE RD	SCHLACTER, JAMES & MICHELLE	1500 NORTH TUCKAHOE RD	WILLIAMSTOWN, NJ 08094	
Monroe Township	14501	17		1498 N TUCKAHOE RD	PORTER, ANTHONY & NORMAN	1498 NORTH TUCKAHOE RD	WILLIAMSTOWN, NJ 08094	
Monroe Township	14501	18		1494 N TUCKAHOE RD	KENNEDY, DEBORAH S	1494 N TUCKAHOE RD	WILLIAMSTOWN, NJ 08094	
Monroe Township	14501	19		1490 N TUCKAHOE RD	KOHLENBERG, ALBERT & ACCOGLIO, DANI	1490 TUCKAHOE RD	WILLIAMSTOWN, NJ 08094	
Monroe Township	14501	20		1488 N TUCKAHOE RD	HALL, KENNETH	9 PRICE LANE	SICKLERVILLE, NJ 08081	
Monroe Township	14501	21		1482 N TUCKAHOE RD	MOORE, JAMES L & LOUISE	1482 NORTH TUCKAHOE RD	WILLIAMSTOWN, NJ 08094	
Monroe Township	14501	22		1480 N TUCKAHOE RD	GREATER PROMISE OF HOLINESS CHURCH	1480 N TUCKAHOE RD	WILLIAMSTOWN, NJ 08094	
Monroe Township	14501	23		1464 N TUCKAHOE RD	LODGE, JERRY ALLEN & GROVES, GLENN R	1464 N TUCKAHOE RD	WILLIAMSTOWN, NJ 08094	

List of Utilities
Monroe Township, Gloucester County

State Highways
Attn.: Highway Inspector
NJ Department of Transportation
One Executive Campus
Route 70 West
Cherry Hill, NJ 08002
856-486-6600

County Highways
Gloucester County Highway Department
1200 North Delsea Drive
Clayton, NJ 08312
856-307-6400

Monroe Municipal Utilities Authority
372 Main Street South
Williamstown, NJ 08094
856-629-1444

South Jersey Gas
Corporate Headquarters
1 South Jersey Plaza
Folsom, NJ 08037
1-888-766-9900

Atlantic City Electric
Joseph B. Riding, Mgr.
5100 Harding Hwy.
Mays Landing, NJ 08330
1-800-642-3780

Comcast Cable Co.
301 South Main Road
Vineland, NJ 08360
Attn.: Construction Department
1-800-COMCAST

Verizon New Jersey
9 Gates Avenue
Montclair, NJ 07042
1-800-VERIZON

County Planning Department
Gloucester County Planning Board
1200 North Delsea Drive
Clayton, NJ 08312
856-307-6650

Public Service Electric and Gas Company
Manager – Corporate Properties
80 Park Plaza, T6B
Newark, NJ 07102
1-800-436-PSEG

Utilities List for Certified List of Names

LIST OF REGULATORY APPROVALS	PENDING	APPROVED	DATE
MONROE TOWNSHIP PLANNING BOARD (PRELIMINARY & FINAL)	X		
GLOUCESTER COUNTY PLANNING BOARD	X		
GLOUCESTER COUNTY SOIL CONSERVATION DISTRICT	X		

ZONING SCHEDULES AND BULK AREA REQUIREMENTS

LOTS 8 & 9
COMMUNITY COMMERCIAL (BP ZONE)
USE: PROPOSED SELF-STORAGE (PERMITTED)

DESCRIPTION	REQUIRED	PROPOSED
MIN. LOT AREA	20,000 SF	8.91 Ac. ±
MIN. LOT WIDTH	100 FT.	384.15 FT.
MIN. SIDE YARD (EACH)	20 FT.	64.2 FT.
MIN. FRONT YARD	40 FT.	159 FT.
MIN. REAR YARD	35 FT.	81.3 FT.
MAX. LOT COVERAGE	75%	50.9 %
MAX. BUILDING HEIGHT	35 FT.	< 35 FT.

PROPOSED LOT 7.01
R2 ZONING REGULATIONS
USE: EXISTING DWELLING TO REMAIN

DESCRIPTION	REQUIRED	PROPOSED
MIN. LOT AREA	43,560 SF	37,565 SF ± (VARIANCE REQUIRED)
MIN. LOT WIDTH	120 FT.	150.54 FT.
MIN. LOT FRONTAGE	100 FT.	150.54 FT.
MIN. SIDE YARD (EACH)	25 FT.	32.7 FT.
MIN. FRONT YARD	50 FT.	93.8 FT.
MIN. REAR YARD	75 FT.	108.2 FT.

PROPOSED LOT 7.02
BP ZONE
USE: VEHICLE STORAGE (CONDITIONAL USE)

DESCRIPTION	REQUIRED	PROPOSED
MIN. LOT AREA	80,000 SF	304,586 SF ±
MIN. LOT WIDTH	150 FT.	176 FT.
MIN. LOT FRONTAGE	150 FT.	0 FT.
MIN. SIDE YARD (EACH)	30 FT.	N/A
MIN. FRONT YARD	100 FT.	N/A
MIN. REAR YARD	50 FT.	N/A
MAX. LOT COVERAGE	65%	46.2 %

SELF-STORAGE BUILDING AREAS:
PROPOSED SELF-STORAGE BUILDINGS
4 BUILDINGS (50' x 240' = 12,000 SF)
4 BUILDINGS (30' x 240' = 7,200 SF)

PROPOSED BUILDING AREA – (12,000 SF X 4) + (7,200 SF x 4) = 76,800 SF

VEHICLE STORAGE AREA:
LOT SIZE: 303,995 SF
REQUIRED: ONE STALL ALLOWED PER 2,500 SF

304,586 / 2,500 = 121 VEHICLES ALLOWED

PROPOSED:
42 CAR PARKING STALLS (9'x18')
10 TRUCK PARKING STALLS (15'x60')
68 TRUCK PARKING STALLS (15'x40')
120 TOTAL PARKING STALLS PROPOSED

VARIANCES TO BE REQUESTED:

1) 175-163E(2) – AN 8' HIGH OPAQUE FENCE IS REQUIRED AROUND THE VEHICLE STORAGE AREA, THE APPLICANT IS PROPOSING A BERM IN PLACE OF THE FENCING.

2) VARIANCE TO ALLOW GREENHOUSE LOCATED ON LOT 8.

WAIVERS TO BE REQUESTED:

1) WAIVER FROM SHOWING EXISTING CONTOURS 200' PAST THE PROPERTY LINES, CONTOURS ARE SHOWN IN AND WITHIN 200' FROM THE AREAS WHERE DEVELOPMENT IS PROPOSED.

2) WAIVER FROM SHOWING PROPOSED LIGHTING EXTENDING 100 FEET PAST THE PROPERTY LINE. PROPOSED LIGHTING IS BEING SHOWN IN THE AREA OF THE PROPOSED SELF-STORAGE ONLY.

3) WAIVER FROM PROVIDING SURVEY INFORMATION FOR LOTS 4 AND 10, SINCE THERE IS NO PROPOSED DEVELOPMENT PROPOSED FOR LOT 4 AND LOT 10 IS JUST AN ACCESS DRIVE.

4) WAIVER FROM PROVIDING ARCHITECTURAL PLANS, THESE WILL BE PROVIDED PRIOR TO ISSUANCE OF BUILDING PERMITS.

5) WAIVER FROM PROVIDING AN ENVIRONMENTAL IMPACT REPORT, A REPORT WAS PROVIDED FOR LOT 10 FOR A PREVIOUS APPLICATION.

SUMMARY OF LOT USAGE:

LOT 4: EXISTING LOT 4 USES CONSISTS OF FARMING AND COMPOSTING, THIS WILL REMAIN THE SAME, WITH NO CHANGES PROPOSED.

LOT 7: EXISTING LOT 7 HAS AN EXISTING DWELLING LOCATED ON IT THAT FRONTS TUCKAHOE ROAD. LOT 7 IS PROPOSED TO BE SUBDIVIDED AS FOLLOWS:

PROPOSED LOT 7.01 – EXISTING DWELLING WILL REMAIN ON A SUBDIVIDED LOT (NON-CONFORMING LOT AREA).

PROPOSED LOT 7.02 – THIS LOT WILL BE USED FOR PROPOSED VEHICLE STORAGE AND PLACEMENT OF EXISTING SEABOX STRUCTURES. THE SEABOX STRUCTURES WILL BE SOLD WITHIN 12 MONTHS OF SITE PLAN APPROVALS. THE PROPOSED BASIN WILL BE LOCATED PARTIALLY ON THIS LOT FOR STORMWATER MANAGEMENT.

LOTS 8 & 9: THESE LOTS WILL BE UTILIZED FOR PROPOSED SELF-STORAGE, WHICH WILL BE OPEN FOR PUBLIC USE. THE PROPOSED BASIN WILL BE LOCATED PARTIALLY ON THIS LOT FOR STORMWATER MANAGEMENT.

ANY EXISTING VEHICLES OR SEABOX STRUCTURES LOCATED ON THESE LOTS WILL BE RELOCATED TO PROPOSED LOT 7.02.

LOT 10: EXISTING LOT 10 USES INCLUDE A RETAIL BUILDING, AN ACCESSORY STORAGE BUILDING, A STORMWATER MANAGEMENT BASIN AS WELL AS AN AREA WHERE MULCH IS MANUFACTURED, WHICH UTILIZES TWO EXISTING WATER STORAGE TANKS. THESE USES WILL REMAIN THE SAME AND ANY EXISTING VEHICLES OR SEABOX STRUCTURES LOCATED ON THIS LOT WILL ALSO BE RELOCATED TO PROPOSED LOT 7.02.

SITE DATA:

1. THE PROPERTY IS KNOWN AS PLATE 143, BLOCK 14301, LOTS 4 & 7–10 AS SHOWN ON THE OFFICIAL TAX MAP OF MONROE TOWNSHIP.
2. THE OVERALL PROPERTY CONTAINS 53.8± ACRES.
3. THE PROPERTY IS ZONED BP – BUSINESS PARK DISTRICT.
4. SEE ABOVE SUMMARY OF USES FOR EXISTING AND PROPOSED USES FOR THE SITE.
5. BOUNDARY AND TOPOGRAPHIC INFORMATION TAKEN FROM THE FOLLOWING:
   5.1. SURVEY ENTITLED "BOUNDARY & TOPOGRAPHICAL SURVEY FOR BLOCK 14301, LOTS 8–9, TUCKAHOE ROAD, TOWNSHIP OF MONROE, COUNTY OF GLOUCESTER, NEW JERSEY" AS PREPARED BY DEWBERRY ENGINEERS INC., SIGNED BY KEITH M. LUDWIG, NJ PLS 24GS04324400, DATED 08/22/2018.
   5.2. SURVEY ENTITLED "BOUNDARY & TOPOGRAPHICAL SURVEY FOR BLOCK 14301, LOT 7, TUCKAHOE ROAD, TOWNSHIP OF MONROE, COUNTY OF GLOUCESTER, NEW JERSEY" AS PREPARED BY DEWBERRY ENGINEERS INC., SIGNED BY LISA M. PETERSON, NJ PE AND PLS 24GB04258400 DATED 11/06/2020.
6. VERTICAL DATUM IS NAVD 1988, HORIZONTAL DATUM IS NAD 83.
7. THE PROPERTY IS LOCATED IN FLOOD ZONE X, WHICH IS OUTSIDE THE FLOOD PLAIN LIMIT, AS INDICATED ON COMMUNITY PANEL NO. 34015C0209E OF GLOUCESTER COUNTY (PANEL 209 OF 320), DATED JANUARY 20, 2010.
9. THE HOURS OF OPERATION WILL BE:
   – VEHICLE STORAGE AND SELF STORAGE: 24 HOURS A DAY, 7 DAYS A WEEK
   – RETAIL STORE – 7 AM TO 5PM (MONDAY – SATURDAY)

RODENT CONTROL SCHEDULE:

1. PRIOR TO ANY SITE CLEARING OR A ZONING PERMIT BEING ISSUED, EVIDENCE SHALL BE REPRESENTED TO THE TOWNSHIP ENGINEER, BY A LICENSED EXTERMINATOR, STATING WHETHER ANY RODENTS ARE PRESENT ON THE SITE.
2. IN THE EVENT RODENTS ARE FOUND TO BE WITHIN THE CONFINES OF THE PROPERTY, A REPORT BY A LICENSED EXTERMINATOR SHALL BE PRESENTED TO THE TOWNSHIP ENGINEER, DELINEATING THE METHOD OF RODENT CONTROL AND/OR DISPOSAL. THE REPORT SHALL ALSO CERTIFY THAT NO ADVERSE IMPACT SHALL BE INCURRED ON ADJOINING PROPERTIES DURING THE DEVELOPMENT OF THE PROJECT.
3. DURING CONSTRUCTION, DUMPSTERS SHALL BE UTILIZED FOR SCRAP MATERIALS GENERATED DURING CONSTRUCTION. PROPER DISPOSAL OF THE CONSTRUCTION SCRAP SHALL BE UTILIZED. IF THE METHODS UTILIZED ARE NOT EFFECTIVE, PROPER STEPS WILL BE EFFECTED UNDER THE DIRECTION TO THE LICENSED EXTERMINATOR.
4. IT SHALL BE THE SOLE RESPONSIBILITY OF THE DEVELOPER TO ADHERE TO THE ABOVE PROGRAM.

CODE INFORMATION:

1) TOWNSHIP OF MONROE LAND DEVELOPMENT ORDINANCE
– CHAPTER 175 DATED NOVEMBER 23, 2004.
2) COUNTY OF GLOUCESTER, NEW JERSEY. LAND DEVELOPMENT
RESOLUTION – JUNE 1991
3) SOIL EROSION AND SEDIMENT CONTROL STANDARDS, NEW JERSEY
4) NEW JERSEY DEPARTMENT OF ENVIRONMENTAL PROTECTION STORMWATER MANAGEMENT REGULATIONS, NJAC 7:8.

BEFORE YOU DIG
CALL TOLL FREE
IN NJ
1-800-272-1000
THREE WORKING DAYS BEFORE YOU DIG

811
Know what's below. Call before you dig.

CONTRACTOR SHALL CONTACT THE NEW JERSEY ONE CALL SYSTEM PRIOR TO CONSTRUCTION @ 1–800–272–1000.

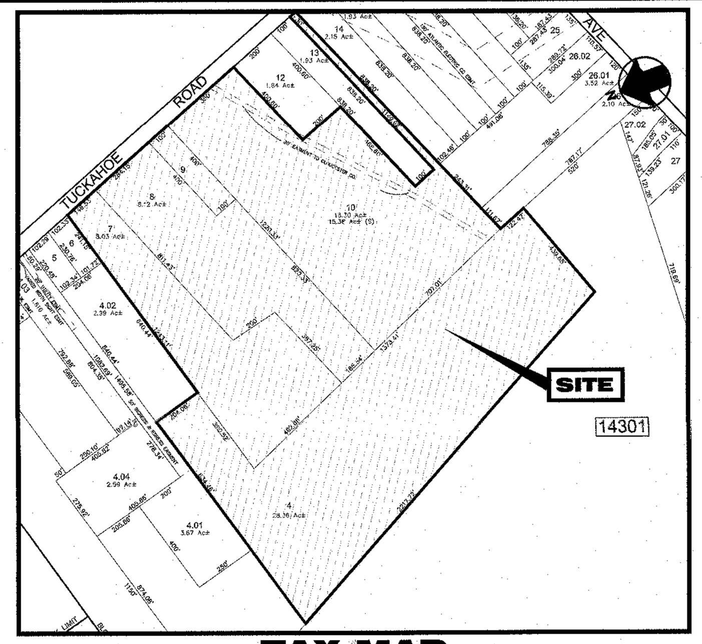

TAX MAP
MONROE TOWNSHIP
PLATE 143, BLOCK 14301 - LOTS 4 & 7-10
SCALE: 1"=500'±

ZONING MAP
MONROE TOWNSHIP
BP ZONE DISTRICT
SCALE: 1"=1000'±

BP = BUSINESS PARK
C= COMMERCIAL
R-2 = SUBURBAN RESIDENTIAL
AH = AFFORDABLE HOUSING
AO = AIRPORT OVERLAY

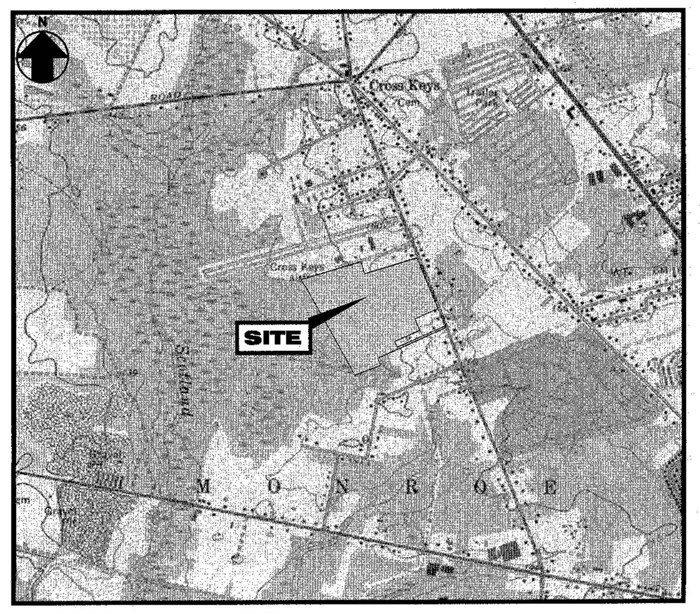

USGS MAP
USGS 7.5 MINUTE TOPOGRAPHIC MAP
EAST PITMAN, NJ QUADRANGLE
SCALE: 1"=2000'±

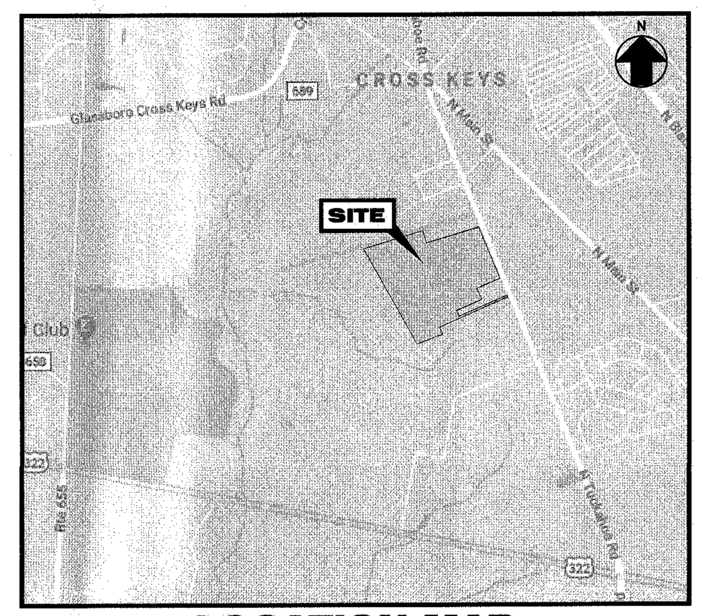

LOCATION MAP
MONROE TOWNSHIP
GLOUCESTER COUNTY, NEW JERSEY
SCALE: 1"=2000'±
(REF:GOOGLE.COM/MAPS)

OWNERS:

LOT 4:
LORING INC.
212 FISH POND ROAD
SEWELL, NJ 08080

LOT 8:
WOOD MANAGEMENT, LLC
749 MULLICA ROAD
MULLICA HILL, NJ 08062

LOT 7:
LORING INC.
212 FISH POND ROAD
SEWELL, NJ 08080

LOTS 9 & 10:
FRED SMITH ORCHARDS
212 FISH POND ROAD
SEWELL, NJ 08080

PRELIMINARY & FINAL MAJOR SITE PLAN
PEACH COUNTRY TRACTOR

PLATE 143, BLOCK 14301 - LOTS 4 & 7-10
TOWNSHIP OF MONROE
GLOUCESTER COUNTY, NEW JERSEY

OWNERS CERTIFICATE

I HEREBY CERTIFY THAT I AM THE EQUITABLE OWNER OF THE PROPERTY DESCRIBED AND SHOWN ON THIS PLAN, THAT THE PLAN WAS MADE AT MY DIRECTION, THAT I ACKNOWLEDGE THE SAME TO BE MY ACT AND DESIRE THE PLAN TO BE DEVELOPED AS SHOWN IN ACCORDANCE WITH ALL APPLICABLE LAWS AND REGULATIONS

LOTS 4 & 7
STEPHEN SMITH, OFFICER
LORING, INC.
212 FISH POND ROAD
SEWELL, NJ 08080
12/8/20
DATE

LOT 8
JOHN STANCH, MEMBER
12/8/2020
JEFFREY SMITH, MEMBER
WOOD MANAGEMENT, LLC
749 MULLICA HILL ROAD
MULLICA HILL, NJ 08062
12/8/20
DATE

LOTS 9 & 10
STEPHEN SMITH, OFFICER
FRED SMITH ORCHARDS, INC.
749 MULLICA HILL ROAD
MULLICA HILL, NJ 08062
12/8/20
DATE

FINAL SITE PLAN APPROVAL GRANTED ______
BY THE MONROE TOWNSHIP PLANNING BOARD.

CHAIRMAN DATE

SECRETARY DATE

CLERK DATE

I HEREBY CERTIFY THAT THE ENGINEERING CONDITIONS IMPOSED ON THE APPLICATION FOR THE FINAL APPROVAL HAVE BEEN MET.

PLANNING BOARD ENGINEER DATE

COUNTY SEAL

Dewberry

Dewberry Engineers Inc.
A Dewberry Company
1015 BRIGGS ROAD
SUITE 210
MOUNT LAUREL, NJ 08054
PHONE: (856) 802-0843
FAX: (856) 802-0846
NJ CERTIFICATE OF AUTHORIZATON NO: 24GA28047600

APPLICANT:
WOOD MANAGEMENT, LLC
749 MULLICA HILL ROAD
MULLICA HILL, NJ 08062

PRELIMINARY AND FINAL
MAJOR SITE PLAN
PEACH COUNTRY TRACTOR

BLOCK 14301, LOTS 4 & 7-10
TOWNSHIP OF MONROE
GLOUCESTER COUNTY, NEW JERSEY

WALTER C. BRONSON, JR.
PROFESSIONAL ENGINEER
NJ LIC NO. 24GE03658600

SCALE
AS SHOWN

NO.	DATE	BY	DESCRIPTION

REVISIONS

DRAWN BY BDJ
APPROVED BY WCB
CHECKED BY WCB
DATE 11/25/2020

TITLE
COVER SHEET

PROJECT NO. 50132475

C-100

bjillson Q:\50132475\CAD\Civil\C-100_Cover Sheet.dwg Dec 07,2020 - 3:40pm

Dewberry

Dewberry Engineers Inc.
A Dewberry Company

1015 BRIGGS ROAD
SUITE 210
MOUNT LAUREL, NJ 08054
PHONE: (856) 802-0843
FAX: (856) 802-0846

NJ CERTIFICATE OF AUTHORIZATON NO: 24GA28047600

APPLICANT:
WOOD MANAGEMENT, LLC
749 MULLICA HILL ROAD
MULLICA HILL, NJ 08062

PRELIMINARY AND FINAL MAJOR SITE PLAN
PEACH COUNTRY TRACTOR

BLOCK 14301, LOTS 4 & 7-10
TOWNSHIP OF MONROE
GLOUCESTER COUNTY, NEW JERSEY

WALTER C. BRONSON, JR.
PROFESSIONAL ENGINEER
NJ LIC NO. 24GE03658600

SCALE
0' 40' 80'
GRAPHIC SCALE: 1" = 40'

NO.	DATE	BY	DESCRIPTION

REVISIONS

DRAWN BY	BDJ
APPROVED BY	WCB
CHECKED BY	WCB
DATE	11/25/2020

TITLE

DEMOLITION PLAN

PROJECT NO. 50132475

C-101

SHEET NO. 2 OF 10

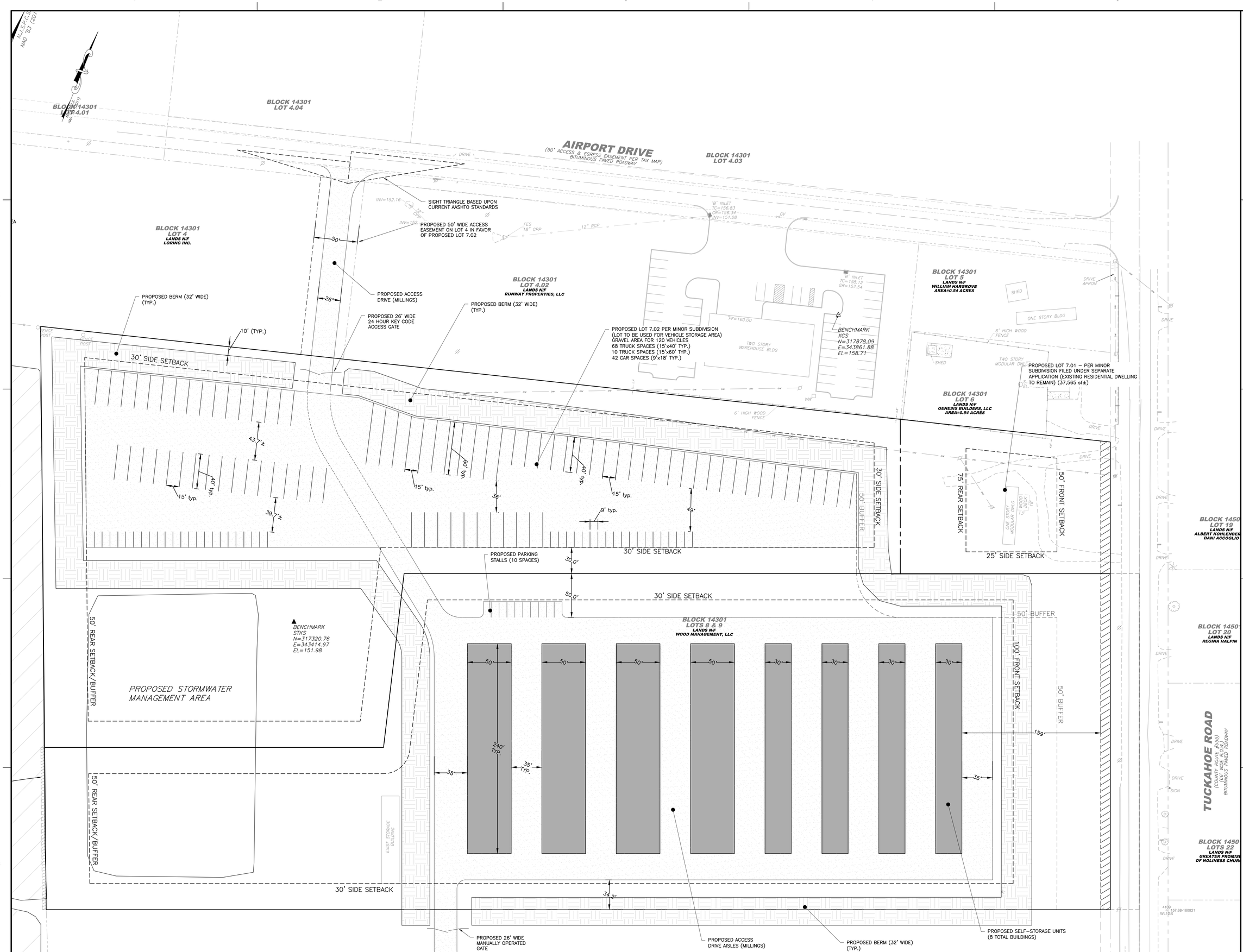

Dewberry

Dewberry Engineers Inc.
A Dewberry Company

1015 BRIGGS ROAD
SUITE 210
MOUNT LAUREL, NJ 08054
PHONE: (856) 602-0843
FAX: (856) 602-0846

NJ CERTIFICATE OF AUTHORIZATON NO: 24GA28047600

APPLICANT:
WOOD MANAGEMENT, LLC
749 MULLICA HILL ROAD
MULLICA HILL, NJ 08062

PRELIMINARY AND FINAL MAJOR SITE PLAN
PEACH COUNTRY TRACTOR

BLOCK 14301, LOTS 4 & 7-10
TOWNSHIP OF MONROE
GLOUCESTER COUNTY, NEW JERSEY

WALTER C. BRONSON, JR.
PROFESSIONAL ENGINEER
NJ LIC NO. 24GE03658600

SCALE
0' 60' 120'
GRAPHIC SCALE: 1" = 60'

NO.	DATE	BY	DESCRIPTION

REVISIONS

DRAWN BY	BDJ
APPROVED BY	WCB
CHECKED BY	WCB
DATE	11/25/2020

TITLE

OVERALL SITE PLAN

PROJECT NO. 50132475

C-102

SHEET NO. 3 OF 10

bjillson Q:\50132475\CAD\Civil\C-102_Overall SP.dwg Dec 08,2020 - 8:48am

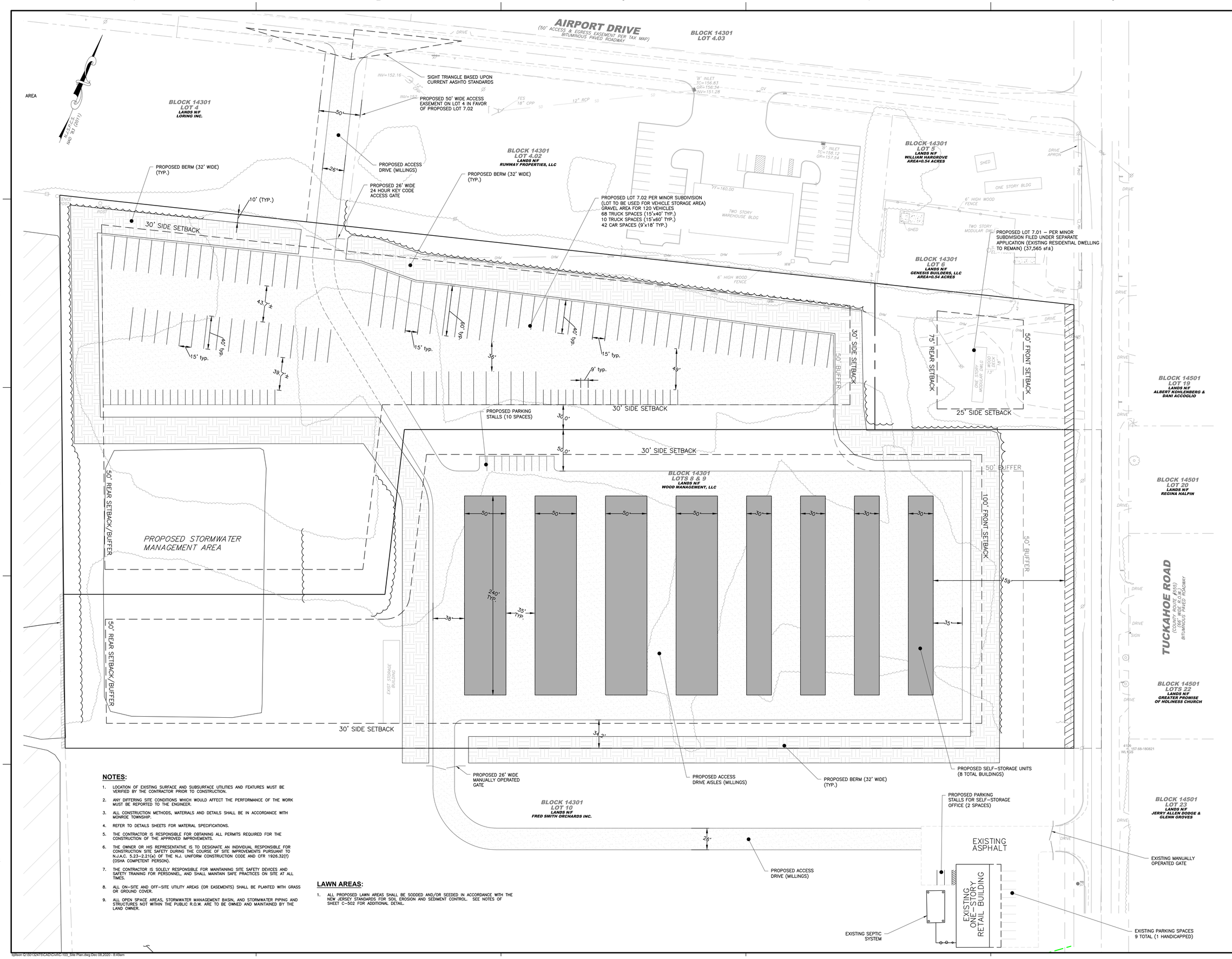

NOTES:

1. LOCATION OF EXISTING SURFACE AND SUBSURFACE UTILITIES AND FEATURES MUST BE VERIFIED BY THE CONTRACTOR PRIOR TO CONSTRUCTION.
2. ANY DIFFERING SITE CONDITIONS WHICH WOULD AFFECT THE PERFORMANCE OF THE WORK MUST BE REPORTED TO THE ENGINEER.
3. ALL CONSTRUCTION METHODS, MATERIALS AND DETAILS SHALL BE IN ACCORDANCE WITH MONROE TOWNSHIP.
4. REFER TO DETAILS SHEETS FOR MATERIAL SPECIFICATIONS.
5. THE CONTRACTOR IS RESPONSIBLE FOR OBTAINING ALL PERMITS REQUIRED FOR THE CONSTRUCTION OF THE APPROVED IMPROVEMENTS.
6. THE OWNER OR HIS REPRESENTATIVE IS TO DESIGNATE AN INDIVIDUAL RESPONSIBLE FOR CONSTRUCTION SITE SAFETY DURING THE COURSE OF SITE IMPROVEMENTS PURSUANT TO N.J.A.C. 5.23–2.21(e) OF THE N.J. UNIFORM CONSTRUCTION CODE AND CFR 1926.32(f) (OSHA COMPETENT PERSON).
7. THE CONTRACTOR IS SOLELY RESPONSIBLE FOR MAINTAINING SITE SAFETY DEVICES AND SAFETY TRAINING FOR PERSONNEL, AND SHALL MAINTAIN SAFE PRACTICES ON SITE AT ALL TIMES.
8. ALL ON–SITE AND OFF–SITE UTILITY AREAS (OR EASEMENTS) SHALL BE PLANTED WITH GRASS OR GROUND COVER.
9. ALL OPEN SPACE AREAS, STORMWATER MANAGEMENT BASIN, AND STORMWATER PIPING AND STRUCTURES NOT WITHIN THE PUBLIC R.O.W. ARE TO BE OWNED AND MAINTAINED BY THE LAND OWNER.

LAWN AREAS:

1. ALL PROPOSED LAWN AREAS SHALL BE SODDED AND/OR SEEDED IN ACCORDANCE WITH THE NEW JERSEY STANDARDS FOR SOIL EROSION AND SEDIMENT CONTROL. SEE NOTES OF SHEET C–502 FOR ADDITIONAL DETAIL.

Dewberry

Dewberry Engineers Inc.
A Dewberry Company

1015 BRIGGS ROAD
SUITE 210
MOUNT LAUREL, NJ 08054
PHONE: (856) 802-0843
FAX: (856) 802-0846

NJ CERTIFICATE OF AUTHORIZATON NO: 24GA28047600

APPLICANT:
WOOD MANAGEMENT, LLC
749 MULLICA HILL ROAD
MULLICA HILL, NJ 08062

PRELIMINARY AND FINAL MAJOR SITE PLAN
PEACH COUNTRY TRACTOR

BLOCK 14301, LOTS 4 & 7-10
TOWNSHIP OF MONROE
GLOUCESTER COUNTY, NEW JERSEY

WALTER C. BRONSON, JR.
PROFESSIONAL ENGINEER
NJ LIC NO. 24GE03658600

SCALE
0' 40' 80'
GRAPHIC SCALE: 1" = 40'

NO.	DATE	BY	DESCRIPTION

REVISIONS

DRAWN BY	BDJ
APPROVED BY	WCB
CHECKED BY	WCB
DATE	11/25/2020

TITLE

SITE PLAN

PROJECT NO. 50132475

C-103

SHEET NO. 4 OF 10

NOTE:

1. THE PROPOSED DEVELOPMENT WILL CONFORM TO THE REQUIREMENTS SET FORTH IN SECTION 7:8-5.8, MAINTENANCE REQUIREMENTS, OF THE NJAC 7:8, STORMWATER MANAGEMENT.

Dewberry

Dewberry Engineers Inc.
A Dewberry Company

1015 BRIGGS ROAD
SUITE 210
MOUNT LAUREL, NJ 08054
PHONE: (856) 802-0843
FAX: (856) 802-0846

NJ CERTIFICATE OF AUTHORIZATON NO: 24GA28047600

APPLICANT:

WOOD MANAGEMENT, LLC
749 MULLICA HILL ROAD
MULLICA HILL, NJ 08062

PRELIMINARY AND FINAL MAJOR SITE PLAN
PEACH COUNTRY TRACTOR

BLOCK 14301, LOTS 4 & 7-10
TOWNSHIP OF MONROE
GLOUCESTER COUNTY, NEW JERSEY

WALTER C. BRONSON, JR.
PROFESSIONAL ENGINEER
NJ LIC NO. 24GE03656600

SCALE

0' 50' 100'

GRAPHIC SCALE: 1" = 50'

NO.	DATE	BY	DESCRIPTION

REVISIONS

DRAWN BY	BDJ
APPROVED BY	WCB
CHECKED BY	WCB
DATE	11/25/2020

TITLE

GRADING, DRAINAGE & UTILITIES PLAN

PROJECT NO. 50132475

C-104

SHEET NO. 5 OF 10

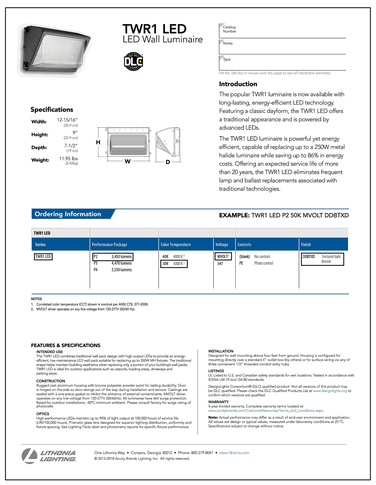

TWR1 LED
LED Wall Luminaire

Catalog Number
Notes
Type

*All the fixtures shown on this page is one of innovative solutions.

Introduction

The popular TWR1 luminaire is now available with long-lasting, energy-efficient LED technology. Featuring a classic dayform, the TWR1 LED offers a traditional appearance and is powered by advanced LEDs.

The TWR1 LED luminaire is powerful yet energy efficient, capable of replacing up to a 250W metal halide luminaire while saving up to 80% in energy costs. Offering an expected service life of more than 20 years, the TWR1 LED eliminates frequent lamp and ballast replacements associated with traditional technologies.

Specifications

Width: 12-15/16" (329 mm)
Height: 9" (229 mm)
Depth: 7-1/2" (191 mm)
Weight: 11.95 lbs (5.42kg)

Ordering Information

EXAMPLE: TWR1 LED P2 50K MVOLT DDBTXD

TWR1 LED					
Series	Performance Package	Color Temperature	Voltage	Controls	Finish
TWR1 LED	P1 1,450 lumens P2 4,900 lumens P4 5,550 lumens	30K 3000 K 50K 5000 K	MVOLT 120 277 347	(blank) No controls PE Photocontrol	DDBTXD Textured Dark Bronze

NOTES
1. Correlated color temperature (CCT) shown is nominal per ANSI C78. 377-2008.
2. MVOLT driver operates on any line voltage from 120-277V (50/60 Hz).

FEATURES & SPECIFICATIONS

INTENDED USE
The TWR1 LED luminaire traditional wall pack design with high output LEDs to provide an energy efficient, long lasting, and cost effective lighting solution. Available in 3 sizes, the TWR1 LED offers a sleek shape helps maintain building aesthetics when replacing only a portion of your buildings wall packs. TWR1 LED is ideal for outdoor applications such as carports, loading areas, driveways and walkways.

CONSTRUCTION
Rugged cast aluminum housing with bronze polyester powder paint for lasting durability. Door frame is cast as part of the housing for ease of installation. Optics are protected by a tempered glass lens sealed with a one-piece gasket to Wet Location standards. Luminaire weighs approximately 12 lbs and operates on any line voltage from 120-277V (50/60Hz). All luminaires have dirt surge protection. Suitable for outdoor installations, -40°C minimum ambient. Please consult factory for surge rating of luminaire.

OPTICS
Long life, maintenance LEDs maintain up to 90% of light output at 100,000 hours of service life. LEM IES/IDSA House. Prismatic glass lens designed for superior lighting distribution, uniformity and fixture spacing. See Lighting Facts label and photometry reports for specific fixture performance.

INSTALLATION
Designed for wall mounting above four feet from ground. Housing is configured for conduit entry through the back or through the bottom (one of three) or for surface wiring via any of three convenient 1/2" threaded conduit entry hubs.

LISTINGS
Meets U.S. and Canadian safety standards for wet locations. Tested in accordance with IESNA LM-79 and LM-80 standards.

Designlights Consortium® (DLC) qualified product. Not all versions of this product may qualify for DLC listing. Please check the DLC Qualified Products List at www.designlights.org to confirm which versions are listed as qualified.

WARRANTY
5-year limited warranty. Complete warranty terms located at www.lithonia.com/terms-conditions-of-sale/lighting-warranty.

Note: Actual performance may differ as a result of end-user environment and application. All values are design or typical values, measured under laboratory conditions at 25 °C. Specifications subject to change without notice.

LITHONIA LIGHTING
One Lithonia Way • Conyers, Georgia 30012 • Phone: 800.279.8041 • www.lithonia.com
© 2010-2019 Acuity Brands Lighting, Inc. All rights reserved.

WALLPACK LIGHT DETAIL
N.T.S.

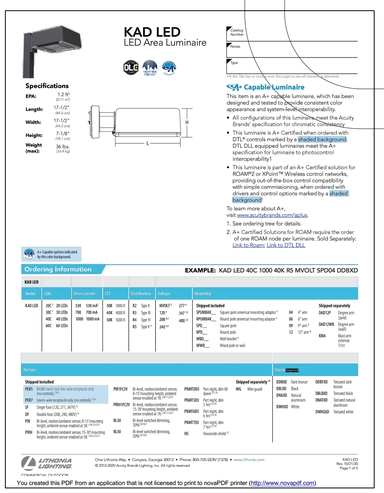

KAD LED
LED Area Luminaire

Catalog Number
Notes
Type

*All the fixtures shown on this page is one of innovative solutions.

Specifications

EPA: 1.2 ft² (0.11 m2)
Length: 17-1/2" (44.5 cm)
Width: 17-1/2" (44.5 cm)
Height: 7-1/8" (18.1 cm)
Weight (max): 36 lbs (16.4 kg)

A+ Capable Luminaire

This item is an A+ capable luminaire, which has been designed and tested to provide consistent color appearance and system-level interoperability.

- All configurations of this luminaire meet the Acuity Brands' specification for chromatic consistency.
- This luminaire is A+ Certified when ordered with DTL® controls marked by a shaded background. DTL DLL equipped luminaires meet the A+ specification for luminaire to photocontrol interoperability.!
- This luminaire is part of an A+ Certified solution for ROAM™2 or XPoint™ Wireless control networks, providing out-of-the-box control compatibility with simple commissioning, when ordered with drivers and control options marked by a shaded background.

To learn more about A+, visit www.acuitybrands.com/aplus.

1. See ordering tree for details.
2. A+ Certified Solutions for ROAM require the order of one ROAM node per luminaire. Sold Separately: Link to Roam, Link to DTL DLL

A+ Capable options indicated by this color/background.

Ordering Information

EXAMPLE: KAD LED 40C 1000 40K R5 MVOLT SPD04 DDBXD

KAD LED

Series	Lifts	Lens current	CCT	Distribution	Voltage	Mounting	Shipped included	Shipped separately
KAD LED	20C[1] 20 LEDs 30C[1] 30 LEDs 40C 40 LEDs 60C 60 LEDs	530 530 mA 700 700 mA 1000 1000 mA	30K 3000 K 40K 4000 K 50K 5000 K	R2 Type R R3 Type R R4 Type R R5 Type V	MVOLT[2,3] 277[2,3] 120[2,3] 347[2,3] 208[2,3] 480[2,3] 240[2,3]	Square pole Round pole Wall bracket[4] Wood pole or wall	SPA Square pole universal mounting adaptor[4] RPA Round pole universal mounting adaptor[4] SPS Square pole RPS Round pole WBA Wall bracket[4] WBW Wood pole or wall	DH Hinged Door Canopy DHL Hinged Door Canopy Large DDL Decorative Door Louver DM2AT Single arm adaptor[4] DM2AT2D Double arm adaptor[4] EWA Wall arm external TGSI

Accessories

Shipped included	Shipped separately[4,5]	Finish (required)
PER5PCS Bi-level, motion/ambient sensor, 5-15' mounting height, ambient sensor enabled at 5fc[6,7,8,9] PER7PCS Bi-level, motion/ambient sensor, 15-30' mounting height, ambient sensor enabled at 5fc[6,7,8,9] BLSD Bi-level switched dimming, 120v[7,8,9] BLSD Bi-level switched dimming, 277v[7,8,9]	WG Wire guard PIMSTD35 Pole adapt. dim till dusk, 35 W[10] PIMSTD50 Pole adapt. dim till dusk, 50 W[10] PIMSTD65 Pole adapt. dim till dusk, 65 W[10] PIMSTD70 Pole adapt. dim till dusk, 70 W[10] HS Houseside shield[11]	DDBXD Dark bronze DBLXD Black DNAXD Natural aluminum DWHXD White DDBTXD Textured dark bronze DBLBXD Textured black DNATXD Textured natural aluminum DWHGXD Textured white

LITHONIA LIGHTING
One Lithonia Way • Conyers, Georgia 30012 • Phone: 800.705.SERV (7378) • www.lithonia.com
© 2010-2020 Acuity Brands Lighting, Inc. All rights reserved.
KAD LED
Rev. 10/29/20
Page 1 of 5

You created this PDF from an application that is not licensed to print to novaPDF printer (http://www.novapdf.com)

BUILDING LIGHT FIXTURE SCHEDULE

Symbol	Qty	Catalog Number	Description	Lumens	Watts	Mounting Height
	169	TWR1 LED P2 50K MVOLT	TWR1 LED WALLPACK	ABSOLUTE	34.4	8'
	2	KAD LED 60C 1000 50K R2 MVOLT	KAD LED, 60 LED, 1 AMP MVOLT DRIVER, 5000K, TYPE 2 OPTICS	ABSOLUTE	216	15'

Dewberry

Dewberry Engineers Inc.
A Dewberry Company

1015 BRIGGS ROAD
SUITE 210
MOUNT LAUREL, NJ 08054
PHONE: (856) 802-0843
FAX: (856) 802-0846

NJ CERTIFICATE OF AUTHORIZATON NO: 24GA28047600

APPLICANT:
WOOD MANAGEMENT, LLC
749 MULLICA HILL ROAD
MULLICA HILL, NJ 08062

PRELIMINARY AND FINAL MAJOR SITE PLAN
PEACH COUNTRY TRACTOR

BLOCK 14301, LOTS 4 & 7-10
TOWNSHIP OF MONROE
GLOUCESTER COUNTY, NEW JERSEY

WALTER C. BRONSON, JR.
PROFESSIONAL ENGINEER
NJ LIC NO. 24GE03658600

SCALE
0' 40' 80'
GRAPHIC SCALE: 1" = 40'

NO.	DATE	BY	DESCRIPTION

REVISIONS

DRAWN BY	BDJ
APPROVED BY	WCB
CHECKED BY	WCB
DATE	11/25/2020

TITLE

LIGHTING PLAN

PROJECT NO. 50132475

C-105

SHEET NO. 6 OF 10

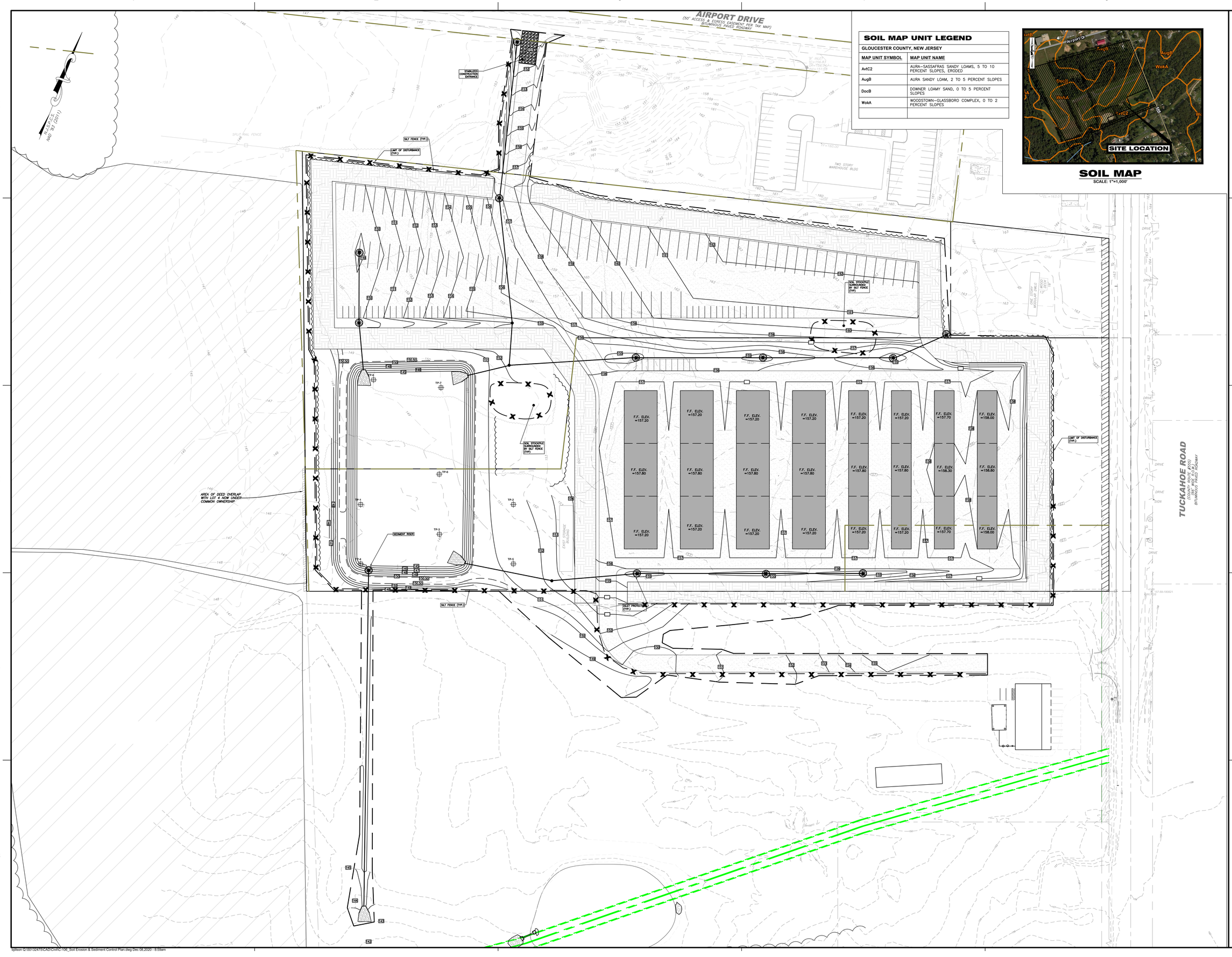

SOIL MAP UNIT LEGEND

GLOUCESTER COUNTY, NEW JERSEY

MAP UNIT SYMBOL	MAP UNIT NAME
AvtC2	AURA–SASSAFRAS SANDY LOAMS, 5 TO 10 PERCENT SLOPES, ERODED
AugB	AURA SANDY LOAM, 2 TO 5 PERCENT SLOPES
DocB	DOWNER LOAMY SAND, 0 TO 5 PERCENT SLOPES
WokA	WOODSTOWN–GLASSBORO COMPLEX, 0 TO 2 PERCENT SLOPES

SOIL MAP

SCALE: 1"=1,000'

Dewberry

Dewberry Engineers Inc.
A Dewberry Company

1015 BRIGGS ROAD
SUITE 210
MOUNT LAUREL, NJ 08054
PHONE: (856) 802-0843
FAX: (856) 802-0846

NJ CERTIFICATE OF AUTHORIZATON NO: 24GA28047600

APPLICANT:

WOOD MANAGEMENT, LLC
749 MULLICA HILL ROAD
MULLICA HILL, NJ 08062

PRELIMINARY AND FINAL MAJOR SITE PLAN
PEACH COUNTRY TRACTOR

BLOCK 14301, LOTS 4 & 7-10
TOWNSHIP OF MONROE
GLOUCESTER COUNTY, NEW JERSEY

WALTER C. BRONSON, JR.
PROFESSIONAL ENGINEER
NJ LIC NO. 24GE03658600

SCALE

0' 30' 60'

GRAPHIC SCALE: 1" = 30'

NO.	DATE	BY	DESCRIPTION

REVISIONS

DRAWN BY	BDJ
APPROVED BY	WCB
CHECKED BY	WCB
DATE	11/25/2020

TITLE

SOIL EROSION & SEDIMENT CONTROL PLAN

PROJECT NO. 50132475

C-106

SHEET NO. 7 OF 10

tjillson Q:\50132475\CAD\Civil\C-106_Soil Erosion & Sediment Control Plan.dwg Dec 08,2020 - 8:59am

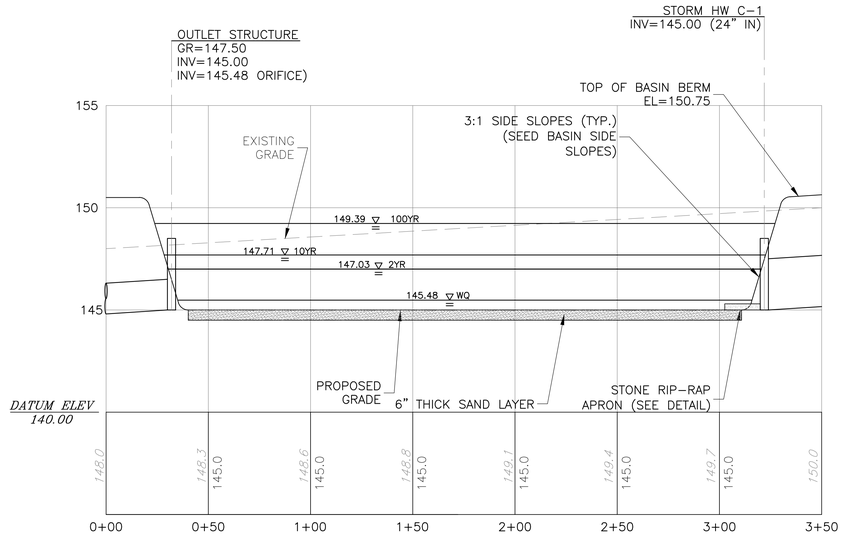

BASIN SECTION

0' 3' 6'
VERTICAL GRAPHIC SCALE: 1" = 3'

0' 30' 60'
HORIZONTAL GRAPHIC SCALE: 1" = 30'

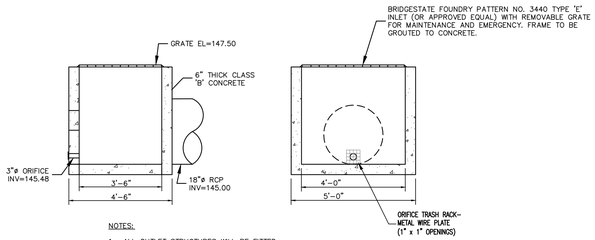

NOTES:

1. ALL OUTLET STRUCTURES WILL BE FITTED WITH TRASH RACKS.
2. ALL TRASH RACKS SHALL BE CONSTRUCTED OF RIGID, DURABLE AND CORROSION RESISTANT MATERIAL AND DESIGNED TO WITHSTAND A PERPENDICULAR LIVE LOADING OF 300 POUNDS PER SQUARE FOOT.
3. THE BARS OF THE TRASH RACKS SHALL HAVE A MAXIMUM SPACING OF SIX INCHES.
4. CONCRETE COMPRESSIVE STRENGTH TO BE 4,500 PSI MINIMUM.
5. PROVIDE BRUSHED CONCRETE FINISH ON ALL EXPOSED SURFACES OF OUTLET STRUCTURES.

BASIN OUTLET STRUCTURE #D-1
(TYPE 'E' INLET)
N.T.S.

BASIN NOTES:

1. ALL SEED MIXTURES REFERENCED FROM TABLE 4-3 OF THE NJ STANDARDS FOR SOIL EROSION AND SEDIMENT CONTROL.

MIXTURE #8:	STRONG CREEPING RED FESCUE	40 LBS/ACRE
	KENTUCKY BLUEGRASS	20 LBS/ACRE
	PERENNIAL RYEGRASS	10 LBS/ACRE
	OR REDTOP	3 LBS/ACRE
	PLUS WHITE CLOVER	5 LBS/ACRE
MIXTURE #11:	DEERTONGUE	20 LBS/ACRE
	REDTOP	2 LBS/ACRE
	WILD RYE (ELYMUS)	15 LBS/ACRE
	SWITCHGRASS	25 LBS/ACRE

2. A GEOTECHNICAL ENGINEER SHALL BE REQUIRED TO BE ON-SITE DURING BASIN CONSTRUCTION ACTIVITIES TO ENSURE PROPER CONSTRUCTION OF THE BASIN.
3. UPON EXCAVATION AND COMPLETION OF THE STORMWATER MANAGEMENT SYSTEM, A NEW JERSEY LICENSED PROFESSIONAL ENGINEER SHALL CERTIFY IN WRITING THAT THE STORMWATER MANAGEMENT FACILITIES WERE PROPERLY CONSTRUCTED AND WILL OPERATE AS INTENDED. THE CERTIFICATION SHALL INCLUDE COMPLETE AS-BUILT PLANS (SIGNED BY A NJ LICENSED LAND SURVEYOR) AND UTILITY TESTING RESULTS FOR ALL CONSTRUCTED UTILITIES PRIOR TO ROADWAY BASE COURSE PAVING AND PRIOR TO PLACING THE UTILITIES INTO SERVICE.
4. BASINS SHALL NOT BE PLACED INTO OPERATION UNTIL CONTRIBUTORY DRAINAGE AREAS ARE COMPLETELY STABILIZED.

Dewberry
Dewberry Engineers Inc.
A Dewberry Company
1015 BRIGGS ROAD
SUITE 210
MOUNT LAUREL, NJ 08054
PHONE: (856) 802-0843
FAX: (856) 802-0846
NJ CERTIFICATE OF AUTHORIZATON NO: 24GA28047600

APPLICANT:
WOOD MANAGEMENT, LLC
749 MULLICA HILL ROAD
MULLICA HILL, NJ 08062

PRELIMINARY AND FINAL
MAJOR SITE PLAN
PEACH COUNTRY TRACTOR

BLOCK 14301, LOTS 4 & 7-10
TOWNSHIP OF MONROE
GLOUCESTER COUNTY, NEW JERSEY

WALTER C. BRONSON, JR.
PROFESSIONAL ENGINEER
NJ LIC NO. 24GE03658600

SCALE
AS SHOWN

NO.	DATE	BY	DESCRIPTION

REVISIONS

DRAWN BY BDJ
APPROVED BY WCB
CHECKED BY WCB
DATE 11/25/2020

TITLE
STORMWATER PROFILES & DETAILS

PROJECT NO. 50132475

C-201

SHEET NO. 8 OF 10

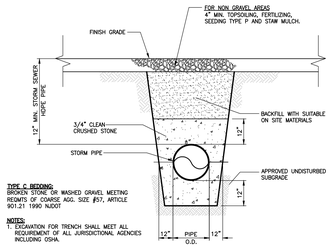

TYPICAL STORM TRENCH DETAIL
N.T.S.

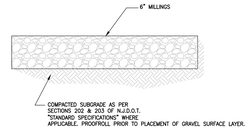

GRAVEL SURFACE SECTION
N.T.S.

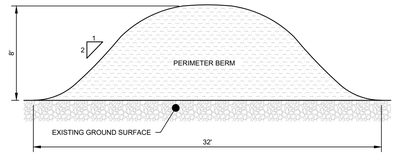

PERIMETER BERM DETAIL
N.T.S.

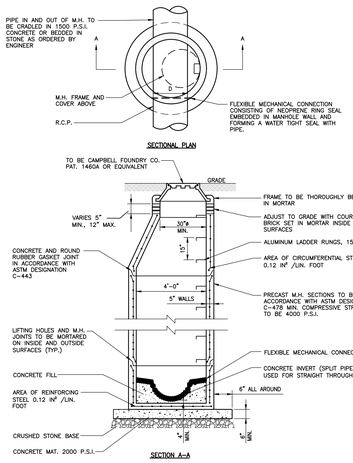

PRECAST STORM MANHOLE DETAIL
N.T.S.

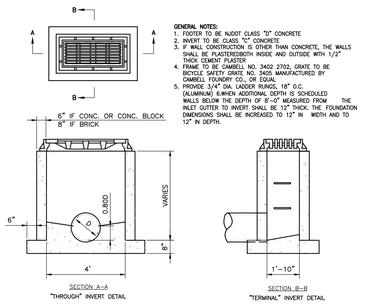

TYPE "A" INLET
N.T.S.

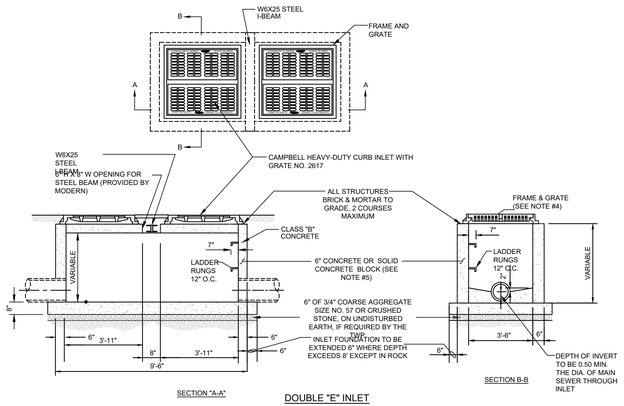

DOUBLE "E" INLET
N.T.S.

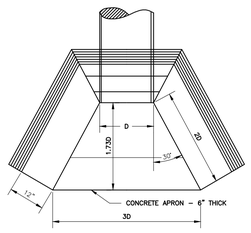

PLAN VIEW
N.T.S

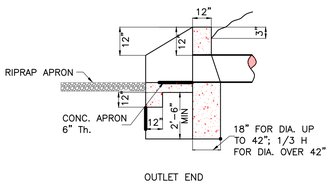

HEADWALLS IN CUBIC YARDS			
PIPE SIZE	FOR CMP	FOR RCP	APRONS
12"	1.4 C.Y.	1.4 C.Y.	0.2 C.Y.
15"	1.7	1.7	0.2
18"	2.1	2.1	0.3
21"	2.5	2.5	0.4
24"	2.9	2.9	0.5
27"	3.3	3.4	0.6
30"	3.7	3.8	0.7
36"	4.7	4.8	0.9
42"	5.8	6.3	1.2
48"	7.6	8.4	1.5
54"	9.7	10.7	1.8
60"	12.2	13.4	2.1
66"	15.0	16.4	2.5
72"	18.1	19.9	3.0

CONCRETE HEADWALL DETAIL
N.T.S.

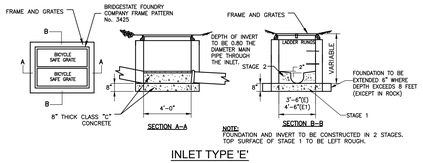

INLET TYPE 'E'
N.T.S.

UTILITY NOTES:

1. THE LOCATION AND DEPTHS OF EXISTING UTILITIES MUST BE VERIFIED IN THE FIELD BY THE CONTRACTOR PRIOR TO CONSTRUCTION.
2. THE CONTRACTOR SHALL BE RESPONSIBLE FOR NOTIFYING ALL UTILITY COMPANIES OF PROPOSED EXCAVATIONS IN THE VICINITY OF SAID UTILITIES PRIOR TO CONSTRUCTION.
3. THE CONTRACTOR SHALL NOTIFY THE ELECTRIC COMPANY/TELEPHONE COMPANY IN ADVANCE OF CONSTRUCTION FOR TEMPORARY SUPPORT OF UTILITY POLES.
4. THE CONTRACTOR IS RESPONSIBLE TO PROVIDE PROPER TRAFFIC CONTROL TO THE SATISFACTION OF LOCAL, COUNTY, AND STATE AUTHORITIES.
5. NO MATERIAL SHALL BE PLACED OR DISTURBED BEYOND THE PROPERTY LINE OR RIGHT-OF-WAY WITHOUT WRITTEN PERMISSION OF THE PROPERTY OWNER DIRECTLY INVOLVED.
6. THE CONTRACTOR SHALL BE RESPONSIBLE FOR RESTORING PAVING, PLANTING, ETC. IN KIND AND TOPSOILING, FERTILIZING AND SEEDING ALL AREAS DISTURBED BY HIS ACTIVITIES. ROAD PAVEMENT REPLACEMENT AND ALL RESTORATION IN DISTURBED AREAS SHALL MEET THE REQUIREMENTS OF THE MUNICIPAL OF AUTHORITY ENGINEER.
7. WHENEVER THE TRENCH BOTTOM DOES NOT AFFORD SUFFICIENT BEARING STRENGTH TO SUSTAIN THE WEIGHT OF THE PIPE AND SUPERIMPOSED LOADS, THE TRENCH BOTTOM SHALL BE OVER EXCAVATED AND STABILIZED WITH SIX (6) INCH MINIMUM THICK LAYERS OF CRUSHED STONE, AS DIRECTED BY THE AUTHORITY ENGINEER.
8. ALL TRENCHES WILL BE BACKFILLED BY COMPACTION IN SIX (6) INCH LAYERS IN STRICT ACCORDANCE WITH THE TRENCH DETAILS AND SPECIFICATIONS.
9. THE CONSTRUCTION SITE MUST BE SWEPT AND CLEANED DAILY WITH NO TRENCHES OPEN OVERNIGHT.
10. ALL STORM DRAIN PIPES TO BE CLASS III WALL B REINFORCED CONCRETE PIPE UNLESS OTHERWISE NOTED.
11. PIPE DIMENSIONS ARE ROUNDED TO THE NEAREST FOOT BETWEEN THE OUTER EDGES OF STRUCTURES. MINOR FIELD ADJUSTMENT MAY BE NECESSARY.
12. ELECTRICAL POWER, TELEPHONE AND CABLE TELEVISION WILL BE BROUGHT INTO THE SITE FROM EXISTING LINES. ALL CABLES WILL BE INSTALLED UNDERGROUND WITHIN THE PROPOSED UTILITY EASEMENTS. APPURTENANCES, INCLUDING, BUT NOT LIMITED TO, VAULTS, TRANSFORMERS, METERS, ETC., WILL BE CONSTRUCTED AS SHOWN ON PLANS TO BE SUBMITTED BY THE RESPECTIVE UTILITY COMPANIES.
13. GAS SERVICE WILL BE PROVIDED BY CONNECTING TO EXISTING GAS LINES. ROUTING TO BE DETERMINED BY SOUTH JERSEY GAS.

BACKFILLING AND FILL REQUIREMENTS SHALL BE PERFORMED IN ACCORDANCE WITH THE FOLLOWING:

A. BACKFILL SHALL CONSIST OF SUITABLE ON-SITE MATERIAL OR IMPORTED SELECT FILL MEETING THE FOLLOWING UCS CLASSIFICATION: GW, GP, GM-GW, GP-GM, SW, SP, SM-SW, SP-SW, OR NJDOT SOIL AGGREGATE CLASSIFICATION: I-13, I-5.

B. BACKFILL SHALL BE FREE OF CLAY MATERIAL, STUMPS, TREE PARTS, TRASH, DEBRIS OR MATERIAL OVER 2" IN SIZE.

C. BACKFILL SHALL BE COMPACTED IN A MAXIMUM OF EIGHT (8) INCH LIFTS TO 95% OF THE MAXIMUM IN-SITU DRY DENSITY OF THE MATERIAL BEING PLACED FOR AREAS BELOW STRUCTURES, ROADWAYS, SIDEWALKS, PIPING.

D. BACKFILL SHALL BE COMPACTED IN A MAXIMUM OF ONE (1) FT. LIFTS TO 90% OF THE MAXIMUM IN-SITU DRY DENSITY OF THE MATERIAL BEING PLACED FOR ALL OTHER AREAS.

(1) CONTRACTOR SHALL CONTACT THE BOARD ENGINEER TO DISCUSS SAMPLING FREQUENCY AND ANALYTICAL PARAMETERS IF/ONCE A MATERIAL SOURCE HAS BEEN SELECTED. THE RESULTS OF THIS TESTING, IF NECESSARY, SHOULD BE PROVIDED TO THE TOWNSHIP AND BOARD ENGINEER FOR REVIEW PRIOR TO IMPORTING TO THE SITE.

(2) CONTRACTOR SHALL PROVIDE ARCHITECT/ENGINEER WITH SOIL TESTING RESULTS FOR BACKFILL MATERIAL INCLUDING, BUT NOT LIMITED TO, UCS CLASSIFICATION, OPTIMUM MOISTURE CONTENT, MAXIMUM DRY DENSITY AND SCREENING FOR PESTICIDES AND CONTAMINANTS IN ACCORDANCE WITH THE NJDEP PRIORITY POLLUTANT LIST.

(3) ONE SAMPLE SHALL BE TESTED FOR EACH 500 C.Y. OF BACKFILL MATERIAL TO BE UTILIZED AND THE RESULTS SUBMITTED TO THE ARCHITECT/ENGINEER PRIOR TO INITIATING BACKFILLING OPERATIONS.

E. COMPACTION SHALL BE MONITORED BY CONTRACTOR'S GEOTECHNICAL ENGINEER, UTILIZING THE DENSITY CONTROL METHOD PER SECTION 203.03.02(I) OF THE NJDOT STANDARD SPECIFICATIONS FOR ROAD AND BRIDGE CONSTRUCTION, LATEST EDITION. A MINIMUM OF TWO (2) MEASUREMENTS SHALL BE TAKEN PER LIFT FOR EACH STRUCTURE/AREA BEING BACKFILLED. COMPACTION TESTING RESULTS SHALL BE SUBMITTED TO THE ARCHITECT/ENGINEER FOR REVIEW PRIOR TO PERFORMING ABOVE GRADE ACTIVITIES ON THE AREAS RECEIVING BACKFILL.

GRADING NOTES:

1. MATERIAL PLACED IN FILL SHALL BE FREE OF DETRIMENTAL AMOUNTS OF SOD, ROOTS, FROZEN SOIL, STONES MORE THAN SIX (6) INCHES, AND OTHER OBJECTIONABLE MATERIAL.
2. DRAIN FILL SHALL BE KEPT FROM BEING CONTAMINATED BY ADJACENT SOIL MATERIALS DURING PLACEMENT BY EITHER PLACING IT IN A CLEANLY EXCAVATED TRENCH, OR BY KEEPING THE DRAIN AT LEAST ONE FOOT ABOVE THE ADJACENT EARTH FILL.
3. SELECTED DRAIN FILL AND BACKFILL MATERIAL SHALL BE PLACED AROUND STRUCTURES AND PIPE CONDUITS AT ABOUT THE SAME RATE ON ALL SIDES TO PREVENT DAMAGE FROM UNEQUAL LOADING. FILL MATERIAL SHALL BE PLACED AND SPREAD BEGINNING AT THE LOWEST POINT IN THE FOUNDATION, AND THEN BROUGHT UP IN CONTINUOUS HORIZONTAL LAYERS THICK ENOUGH THAT THE REQUIRED COMPACTION CAN BE OBTAINED.
4. THE DISTRIBUTION AND GRADATION OF MATERIALS SHALL BE SUCH THAT NO LENSES, POCKETS, STREAKS OR LAYERS OF MATERIAL SHALL DIFFER SUBSTANTIALLY IN TEXTURE OR GRADATION FROM SURROUNDING MATERIAL.
5. THE MOISTURE CONTENT OF THE FILL MATERIAL SHALL BE ADEQUATE FOR OBTAINING THE DESIRED COMPACTION. MATERIAL THAT IS TOO WET SHALL BE DRIED TO MEET THIS REQUIREMENT, AND MATERIAL THAT IS TOO DRY SHALL BE WETTED AND MIXED UNTIL THE REQUIREMENT IS MET. CONSTRUCTION EQUIPMENT SHALL BE OPERATED OVER EACH LAYER OF FILL TO ENSURE THAT THE REQUIRED LEVEL OF COMPACTION IS OBTAINED.
6. FILL ADJACENT TO STRUCTURES, PIPE CONDUITS, OR DRAIN FILL SHALL BE COMPACTED TO A DENSITY EQUIVALENT TO THAT OF THE SURROUNDING FILL BY HAND TAMPING OR BY USING MANUALLY OPERATED POWER TAMPERS OR PLATE VIBRATORS. FILL ADJACENT TO CONCRETE STRUCTURES SHALL NOT BE COMPACTED UNTIL THE CONCRETE HAS HAD TIME TO GAIN ENOUGH STRENGTH TO SUPPORT THE LOAD.
7. GRADING SHALL NOT EXCEED 3 HORIZONTAL TO 1 VERTICAL.
8. MINIMUM SLOPE OF 1% SHALL BE PROVIDED IN SWALES.
9. THE PROPOSED LAWN AREAS WILL BE GRADED WITH LIGHT-WEIGHT CONSTRUCTION EQUIPMENT. LOW GROUND PRESSURE VEHICLES WILL BE UTILIZED IN THE CONSTRUCTION OF THE BASIN AND PROPOSED VEGETATED AREAS IN ORDER TO MAINTAIN GROUND WATER RECHARGE IN THOSE AREAS.
10. THE BASIN SHALL NOT BE PLACED INTO OPERATION UNTIL THE CONTRIBUTING AREA IS COMPLETELY ESTABLISHED.
11. NO TOPSOIL SHALL BE REMOVED FROM THE SITE OR USED AS SPOIL WITHOUT FIRST OBTAINING THE APPROPRIATE PERMITS AND APPROVALS FROM THE PROPERTY OWNER AND MUNICIPALITY.

Dewberry

Dewberry Engineers Inc.
A Dewberry Company

1015 BRIGGS ROAD
SUITE 210
MOUNT LAUREL, NJ 08054
PHONE: (856) 802-0843
FAX: (856) 802-0846

NJ CERTIFICATE OF AUTHORIZATON NO: 24GA28047600

APPLICANT:
WOOD MANAGEMENT, LLC
749 MULLICA HILL ROAD
MULLICA HILL, NJ 08062

PRELIMINARY AND FINAL MAJOR SITE PLAN
PEACH COUNTRY TRACTOR

BLOCK 14301, LOTS 4 & 7-10
TOWNSHIP OF MONROE
GLOUCESTER COUNTY, NEW JERSEY

THIS PLAN WAS PREPARED UNDER MY IMMEDIATE SUPERVISION.
SEAL

WALTER C. BRONSON, JR.
PROFESSIONAL ENGINEER
NJ LIC NO. 24GE03658600

SCALE

AS SHOWN

NO.	DATE	BY	DESCRIPTION

REVISIONS

DRAWN BY	BDJ
APPROVED BY	WCB
CHECKED BY	WCB
DATE	11/25/2020

TITLE

CONSTRUCTION DETAILS & NOTES

PROJECT NO. 50132475

C-501

SHEET NO. 9 OF 10

TEMPORARY VEGETATIVE COVER FOR SOIL STABILIZATION:

SEEDBED PREPARATION:

1. APPLY LIMESTONE (EQUIVALENT TO 50% CALCIUM PLUS MAGNESIUM OXIDES) AT A RATE OF 90 POUNDS PER 1000 S.F. APPLY FERTILIZER AT A RATE OF 500 POUNDS PER ACRE OR 11.5 POUNDS PER 1000 S.F. USING 10-20-10 OR EQUIVALENT.
2. WORK LIME AND FERTILIZER INTO THE SOIL AS NEARLY AS PRACTICAL TO A DEPTH OF 4" WITH A DISC, SPRING-TOOTH HARROW OR OTHER SUITABLE EQUIPMENT. THE FINAL HARROWING OR DISKING OPERATION SHOULD BE ON THE GENERAL CONTOUR. CONTINUE TILLAGE UNTIL A REASONABLY UNIFORM SEEDBED IS PREPARED.
3. INSPECT SEEDBED JUST BEFORE SEEDING. IF TRAFFIC HAS LEFT THE SOIL COMPACTED, THE AREA MUST BE RE-TILLED AS ABOVE.
4. APPLY PERENNIAL RYE GRASS AT A RATE OF 100 POUNDS PER ACRE OR 23 POUNDS PER 1000 S.F.
5. APPLY SEED UNIFORMLY BY HAND, CYCLONE SEEDER, DRILL, CULTIPACKER TYPE SEEDER OR HYDROSEEDER. OPTIMUM DEPTH IS 1/2 INCH (SANDY SOILS, 1 INCH).
6. WHERE FEASIBLE, EXCEPT WHEN A CULTIPACKER TYPE SEEDER OR HYDROSEEDER IS USED, THE SEEDBED SHOULD BE FIRMED FOLLOWING SEEDING OPERATIONS WITH A ROLLER OR LIGHT DRAG. SEEDING OPERATIONS SHOULD BE ON THE CONTOUR.
7. OPTIMAL PLANTING PERIODS FOR MIXES 8 AND 17 ARE FROM FEBRUARY 1 UNTIL APRIL 30 AND FROM AUGUST 15 UNTIL NOVEMBER 30. OPTIMAL PLANTING PERIOD FOR MIX 11 IS FROM FEBRUARY 1 UNTIL APRIL 30.

MULCHING:

1. MULCHING IS REQUIRED ON SITES DIFFICULT TO VEGETATE (SANDS, SLOPES), HYDROSEEDINGS AND OFF-SEASON OPERATIONS. ALL SEEDED AREAS ARE TO BE STRAW MULCHED.
2. MULCH MATERIALS SHOULD BE UNROTTED SALT HAY, HAY OR SMALL GRAIN STRAW AT THE RATE OF 1.5 TO 2.0 TONS PER ACRE, OR 70 TO 90 POUNDS PER 1000 S.F. MULCH BLOWERS SHOULD NOT GRIND OR CHOP THE MATERIAL.
3. SPREAD MULCH UNIFORMLY BY HAND OR MECHANICALLY SO THAT AT LEAST 85% OF THE SOIL SURFACE WILL BE COVERED.
4. MULCH ANCHORING SHOULD BE ACCOMPLISHED IMMEDIATELY AFTER PLACEMENT TO MINIMIZE LOSS BY WIND OR WATER. THIS MAY BE ACCOMPLISHED BY THE PEG AND TWINE METHOD, MULCH NETTINGS, MULCH ANCHORING TOOL OR LIQUID MULCH BINDERS.

STABILIZATION WITH MULCH AND IRRIGATION:

PROTECTIVE MATERIALS:

1. UNROTTED SMALL GRAIN STRAW, HAY OR SALT HAY AT 2.0 TO 2.5 TONS PER ACRE IS SPREAD UNIFORMLY AT 90 TO 115 POUNDS PER 1000 S.F. AND ANCHORED WITH A MULCH ANCHORING TOOL, LIQUID MULCH BINDERS OR NETTING TIEDOWN.
2. ASPHALT EMULSION OR CUTBACK ASPHALT IS USED AT A RATE OF 600 TO 1200 GALLONS PER ACRE. THIS IS SUITABLE FOR A LIMITED PERIOD OF TIME WHERE CONSTRUCTION TRAFFIC IS NOT A PROBLEM.
3. SYNTHETIC OR ORGANIC SOIL STABILIZERS MAY BE USED UNDER SUITABLE CONDITIONS AND IN SUFFICIENT QUANTITIES.
4. WOOD-FIBER OR PAPER-FIBER MULCH AT THE RATE OF 1500 POUNDS PER ACRE MAY BE APPLIED BY A HYDROSEEDER OR HYDROMULCHING.
5. MULCH NETTING, SUCH AS PAPER, JUTE, EXCELSIOR, COTTON OR PLASTIC MAY BE USED.

MULCH ANCHORING:

1. MULCH ANCHORING SHOULD BE ACCOMPLISHED IMMEDIATELY AFTER PLACEMENT TO MINIMIZE LOSS BY WIND OR WATER. THIS MAY BE DONE BY THE PEG AND TWINE METHOD, MULCH NETTINGS, MULCH ANCHORING TOOL OR LIQUID MULCH BINDERS.

IRRIGATION:

IF SOIL MOISTURE IS DEFICIENT, SUPPLY NEW SEEDINGS WITH ADEQUATE WATER (A MINIMUM OF 1/4 INCH TWICE DAILY UNTIL VEGETATION IS WELL ESTABLISHED). THIS IS ESPECIALLY TRUE WHEN SEEDINGS ARE MADE IN ABNORMALLY DRY OR HOT WEATHER OR ON DROUGHTY SITES.

PERMANENT VEGETATIVE COVER FOR SOIL STABILIZATION:

TOPSOIL:

1. TOPSOIL OBTAINED FROM STRIPPING WITHIN THE LIMITS OF THE SITE OR FURNISHED FROM OUTSIDE THE SITE SHALL CONTAIN NO STONES, LUMPS, ROOTS OR SIMILAR OBJECTS LARGER THAN 2" IN ANY DIMENSION, AND SHALL HAVE A PH OF NOT LESS THAN 5.0 NOR MORE THAN 7.5.
2. WHEN THE PH VALUE OF THE TOPSOIL IS LESS THAN 5.0, IT SHALL BE INCREASED BY APPLYING GROUND LIMESTONE AT A RATE NECESSARY TO OBTAIN AN ACCEPTABLE PH LEVEL.
3. TOPSOIL FURNISHED FROM SOURCES OUTSIDE THE LIMITS OF THE SITE SHALL HAVE A MINIMUM ORGANIC CONTENT OF NOT LESS THAN 2.75% BY WEIGHT. ORGANIC MATTER CONTENT MAY NOT BE RAISED BY ADDITIVES.
4. IMMEDIATELY PRIOR TO TOPSOIL DISTRIBUTION, THE SURFACE SHALL BE SCARIFIED TO PROVIDE A GOOD BOND WITH THE TOPSOIL.
5. THE TOPSOIL SHALL BE APPLIED TO A UNIFORM DEPTH OF 5" (UNSETTLED). SOIL WITH A PH VALUE OF 4.0 OR LESS SHALL BE COVERED WITH A MINIMUM DEPTH OF 12" OF SOIL HAVING A PH OF 5.0 OR MORE.

SEEDBED PREPARATION:

1. APPLY LIMESTONE (EQUIVALENT TO 50% CALCIUM PLUS MAGNESIUM OXIDES) AT A RATE OF 135 POUNDS PER 1000 S.F. APPLY FERTILIZER AT A RATE OF 500 POUNDS PER ACRE OR 11 POUNDS PER 1000 S.F. USING 10-20-10 OR EQUIVALENT. IN ADDITION, 300 POUNDS 38-0-0 PER ACRE OR EQUIVALENT OF SLOW RELEASE NITROGEN MAY BE USED IN LIEU OF TOPDRESSING.
2. WORK LIME AND FERTILIZER INTO SOIL AS NEARLY AS PRACTICAL TO A DEPTH OF 4" WITH A DISC, SPRING TOOTH HARROW OR OTHER SUITABLE EQUIPMENT. THE FINAL HARROWING OR DISKING OPERATION SHOULD BE ON THE GENERAL CONTOUR. CONTINUE TILLAGE UNTIL A REASONABLY UNIFORM, FINE SEEDBED IS PREPARED. ALL BUT CLAY OR SILTY SOILS AND COARSE SANDS SHOULD BE ROLLED TO FIRM THE SEEDBED WHENEVER FEASIBLE.
3. REMOVE FROM THE SURFACE ALL STONES 2" OR LARGER IN ANY DIMENSION; REMOVE ALL OTHER DEBRIS SUCH AS WIRE, CABLE, TREE ROOTS, PIECES OF CONCRETE, CLODS, LUMPS OR OTHER UNSUITABLE MATERIAL.
4. INSPECT SEEDBED JUST BEFORE SEEDING. IF TRAFFIC HAS LEFT SOIL COMPACTED, THE AREA MUST BE RETILLED AND FIRMED AS ABOVE.

SEEDING:

1. REFER TO TABLE 4-3, "STANDARDS FOR SOIL EROSION AND SEDIMENT CONTROL IN NEW JERSEY", REVISED 2014, FOR SOILS AND DATES FOR PERMANENT SEEDINGS FOR SOIL STABILIZATION.

APPLY THE FOLLOWING MIXTURE (MIX #13) TO LAWN AREAS:
HARD FESCUE @ 4 LB/1000 S.F.
KENTUCKY BLUEGRASS @ 1 LB/1000 S.F.
PERENNIAL RYEGRASS @ 1 LB/1000 S.F.
TOTAL 6 LB/1000 S.F.

2. APPLY SEED UNIFORMLY BY HAND, CYCLONE SEEDER, DRILL, CULTIPACKER TYPE SEEDER OR HYDROSEEDER. NORMAL SEEDING DEPTH IS FROM 1/4 TO 1/2 INCH.
3. WHERE FEASIBLE, EXCEPT WHERE A CULTIPACKER TYPE SEEDER OR HYDROSEEDER IS USED, THE SEEDBED SHOULD BE FIRMED FOLLOWING SEEDING OPERATIONS WITH A ROLLER OR LIGHT DRAG. SEEDING OPERATIONS SHOULD BE ON THE CONTOUR.
4. HYDROSEEDED AREAS ALSO REQUIRE STRAW, MULCH AND TACKIFIER.
5. OPTIMAL PLANTING PERIODS ARE FROM FEBRUARY 1 UNTIL APRIL 30 AND FROM AUGUST 15 UNTIL OCTOBER 30.

MULCHING:

REFER TO THE SPECIFICATIONS LISTED UNDER "TEMPORARY VEGETATIVE COVER FOR SOIL STABILIZATION".

IRRIGATION:

IF SOIL MOISTURE IS DEFICIENT, SUPPLY NEW SEEDINGS WITH ADEQUATE WATER (A MINIMUM OF 1/4 INCH TWICE DAILY UNTIL VEGETATION IS WELL ESTABLISHED). THIS IS ESPECIALLY TRUE WHEN SEEDINGS ARE MADE IN ABNORMALLY DRY OR HOT WEATHER OR ON DROUGHTY SITES.

TOPDRESSING:

SPRING SEEDINGS WILL REQUIRE AN APPLICATION OF FERTILIZER SUCH AS 10-20-10 OR EQUIVALENT AT 500 POUNDS PER ACRE OR 11.5 POUNDS PER 1000 S.F. BETWEEN MARCH 15 AND MAY 1. FALL SEEDINGS WILL REQUIRE THE ABOVE BETWEEN SEPT. 1 AND OCT. 15. IF SLOW RELEASE NITROGEN (300 POUNDS OF 38-0-0 PER ACRE) IS USED IN ADDITION TO THE SUGGESTED FERTILIZER, THIS FOLLOW UP OF TOPDRESSING IS NOT MANDATORY.

EXPEDIENT METHOD OF DUST CONTROL:

IN ORDER TO ALLEVIATE DUST AND SOIL EROSION AT THE CONSTRUCTION SITE, AN EXPEDIENT METHOD OF DUST CONTROL SHALL BE IMPLEMENTED. WATER SHALL BE SPRINKLERED ON A DAILY BASIS THROUGHOUT ALL DISTURBED AREAS OF THE PROPERTY UNLESS WEATHER CONDITIONS WARRANT MORE FREQUENT OR LESS FREQUENT WATERINGS. ONCE AN AREA IS FULLY STABILIZED, IT WILL NOT REQUIRE DAILY SPRINKLERING.

SOIL EROSION AND SEDIMENT CONTROL NOTES

1. ALL APPLICABLE EROSION AND SEDIMENT CONTROL PRACTICES SHALL BE IN PLACE PRIOR TO ANY GRADING OPERATION AND/OR INSTALLATION OF PROPOSED STRUCTURES OR UTILITIES.

2. SOIL EROSION AND SEDIMENT CONTROL PRACTICES ON THIS PLAN SHALL BE CONSTRUCTED IN ACCORDANCE WITH THE STANDARDS FOR SOIL EROSION AND SEDIMENT CONTROL IN NEW JERSEY.

3. APPLICABLE EROSION AND SEDIMENT CONTROL PRACTICES SHALL BE LEFT IN PLACE UNTIL CONSTRUCTION IS COMPLETED AND/OR THE AREA IS STABILIZED.

4. THE CONTRACTOR SHALL PERFORM ALL WORK, FURNISH ALL MATERIALS AND INSTALL ALL MEASURES REQUIRED TO REASONABLY CONTROL SOIL EROSION RESULTING FROM CONSTRUCTION OPERATIONS AND PREVENT EXCESSIVE FLOW OF SEDIMENT FROM THE CONSTRUCTION SITE.

5. ANY DISTURBED AREA THAT IS TO BE LEFT EXPOSED FOR MORE THAN THIRTY (30) DAYS AND NOT SUBJECT TO CONSTRUCTION TRAFFIC SHALL IMMEDIATELY RECEIVE A TEMPORARY SEEDING AND FERTILIZATION IN ACCORDANCE WITH THE NEW JERSEY STANDARDS AND THEIR RATES SHOULD BE INCLUDED IN THE NARRATIVE. IF THE SEASON PROHIBITS TEMPORARY SEEDING, THE DISTURBED AREAS WILL BE MULCHED WITH SALT HAY OR EQUIVALENT AND ANCHORED IN ACCORDANCE WITH THE NEW JERSEY STANDARDS (I.E. PEG AND TWINE, MULCH NETTING OR LIQUID MULCH BINDER).

6. IT SHALL BE THE RESPONSIBILITY OF THE DEVELOPER TO PROVIDE CONFIRMATION OF LIME, FERTILIZER AND SEED APPLICATION AND RATES OF APPLICATION AT THE REQUEST OF THE GLOUCESTER SOIL CONSERVATION DISTRICT.

7. ALL CRITICAL AREAS SUBJECT TO EROSION WILL RECEIVE A TEMPORARY SEEDING IN COMBINATION WITH STRAW MULCH AT A RATE OF 2 TONS PER ACRE, ACCORDING TO THE NEW JERSEY STANDARDS IMMEDIATELY FOLLOWING ROUGH GRADING.

8. THE SITE SHALL AT ALL TIMES BE GRADED AND MAINTAINED SUCH THAT ALL STORMWATER RUNOFF IS DIVERTED TO SOIL EROSION AND SEDIMENT CONTROL FACILITIES.

9. ALL SEDIMENTATION STRUCTURES WILL BE INSPECTED AND MAINTAINED ON A REGULAR BASIS AND AFTER EVERY STORM EVENT.

10. A CRUSHED STONE, TIRE CLEANING PAD WILL BE INSTALLED WHEREVER A CONSTRUCTION ACCESS EXISTS. THE STABILIZED PAD WILL BE INSTALLED ACCORDING TO THE STANDARD FOR STABILIZED CONSTRUCTION ACCESS.

11. ALL DRIVEWAYS MUST BE STABILIZED WITH 2 ½" CRUSHED STONE OR SUBBASE PRIOR TO INDIVIDUAL LOT CONSTRUCTION.

12. PAVED AREAS MUST BE KEPT CLEAN AT ALL TIMES.

13. ALL CATCH BASIN INLETS WILL BE PROTECTED ACCORDING TO THE CERTIFIED PLAN.

14. ALL STORM DRAINAGE OUTLETS WILL BE STABILIZED, AS REQUIRED, BEFORE THE DISCHARGE POINTS BECOME OPERATIONAL.

15. ALL DEWATERING OPERATIONS MUST DISCHARGE DIRECTLY INTO A SEDIMENT FILTER AREA. THE SEDIMENT FILTER SHOULD BE COMPOSED OF A SUITABLE SEDIMENT FILTER FABRIC. (SEE DETAIL). THE BASIN MUST BE DEWATERED TO NORMAL POOL WITHIN 10 DAYS OF THE DESIGN STORM.

16. NJSA 4:24-39, ET SEQ. REQUIRES THAT NO CERTIFICATE OF OCCUPANCY BE ISSUED BEFORE ALL PROVISIONS OF THE CERTIFIED SOIL EROSION AND SEDIMENT CONTROL PLAN HAVE BEEN COMPLIED WITH FOR PERMANENT MEASURES. ALL SITE WORK FOR THE PROJECT MUST BE COMPLETED PRIOR TO THE DISTRICT ISSUING A REPORT OF COMPLIANCE AS A PREREQUISITE TO THE ISSUANCE OF A CERTIFICATE OF OCCUPANCY BY THE MUNICIPALITY.

17. MULCHING IS REQUIRED ON ALL SEEDED AREAS TO INSURE AGAINST EROSION BEFORE GRASS IS ESTABLISHED TO PROMOTE EARLIER VEGETATION COVER.

18. OFFSITE SEDIMENT DISTURBANCE MAY REQUIRE ADDITIONAL CONTROL MEASURES TO BE DETERMINED BY THE EROSION CONTROL INSPECTOR.

19. A COPY OF THE CERTIFIED SOIL EROSION AND SEDIMENT CONTROL PLAN MUST BE MAINTAINED ON THE PROJECT SITE DURING CONSTRUCTION.

20. THE GLOUCESTER SOIL CONSERVATION DISTRICT SHALL BE NOTIFIED 48 HOURS PRIOR TO ANY LAND DISTURBANCE.

21. ANY CONVEYANCE OF THIS PROJECT PRIOR TO ITS COMPLETION WILL TRANSFER FULL RESPONSIBILITY FOR COMPLIANCE WITH THE CERTIFIED PLAN TO ANY SUBSEQUENT OWNERS.

22. IMMEDIATELY AFTER THE COMPLETION OF STRIPPING AND STOCKPILING OF TOPSOIL, THE STOCKPILE MUST BE STABILIZED ACCORDING TO THE STANDARD FOR TEMPORARY VEGETATIVE COVER. STABILIZE TOPSOIL STOCKPILE WITH STRAW MULCH FOR PROTECTION IF THE SEASON DOES NOT PERMIT THE APPLICATION AND ESTABLISHMENT OF TEMPORARY SEEDING. ALL SOIL STOCKPILES ARE NOT TO BE LOCATED WITHIN FIFTY (50) FEET OF A FLOODPLAIN, SLOPE, ROADWAY OR DRAINAGE FACILITY AND THE BASE MUST BE PROTECTED WITH A SEDIMENT BARRIER.

23. ANY CHANGES TO THE SITE PLAN WILL REQUIRE THE SUBMISSION OF A REVISED SOIL EROSION AND SEDIMENT CONTROL PLAN TO THE GLOUCESTER SOIL CONSERVATION DISTRICT. THE REVISED PLAN MUST BE IN ACCORDANCE WITH THE CURRENT NEW JERSEY STANDARDS FOR SOIL EROSION AND SEDIMENT CONTROL.

24. METHODS FOR THE MANAGEMENT OF HIGH ACID PRODUCING SOILS SHALL BE IN ACCORDANCE WITH THE STANDARDS. HIGH ACID PRODUCING SOILS ARE THOSE FOUND TO CONTAIN IRON SULFIDES OR HAVE A pH OF 4 OR LESS.

25. TEMPORARY AND PERMANENT SEEDING MEASURES MUST BE APPLIED ACCORDING TO THE NEW JERSEY STANDARDS, AND MULCHED WITH SALT HAY OR EQUIVALENT IN ACCORDANCE WITH THE NEW JERSEY STANDARDS (I.E. PEG AND TWINE, MULCH NETTING OR LIQUID MULCH BINDER).

26. MAXIMUM SIDE SLOPES OF ALL EXPOSED SURFACES SHALL NOT BE CONSTRUCTED STEEPER THAN 3:1 UNLESS OTHERWISE APPROVED BY THE DISTRICT.

27. DUST IS TO BE CONTROLLED BY AN APPROVED METHOD ACCORDING TO THE NEW JERSEY STANDARDS AND MAY INCLUDE WATERING WITH A SOLUTION OF CALCIUM CHLORIDE AND WATER.

28. ADJOINING PROPERTIES SHALL BE PROTECTED FROM EXCAVATION AND FILLING OPERATIONS ON THE PROPOSED SITE.

29. USE STAGED CONSTRUCTION METHODS TO MINIMIZE EXPOSED SURFACES, WHERE APPLICABLE.

30. ALL VEGETATIVE MATERIAL SHALL BE SELECTED IN ACCORDANCE WITH AMERICAN STANDARDS FOR NURSERY STOCK OF THE AMERICAN ASSOCIATION OF THE NURSERYMAN AND IN ACCORDANCE WITH THE NEW JERSEY STANDARDS.

31. NATURAL VEGETATION AND SPECIES SHALL BE RETAINED WHERE SPECIFIED ON THE LANDSCAPING PLAN.

32. THE SOIL EROSION INSPECTOR MAY REQUIRE ADDITIONAL SOIL EROSION MEASURES TO BE INSTALLED, AS DIRECTED BY THE DISTRICT INSPECTOR.

CONSTRUCTION SEQUENCE

1 WEEK	INSTALL SOIL EROSION CONTROL DEVICES AS SHOWN.
2 WEEKS	CLEAR AND GRUB SITE, STOCKPILE TOPSOIL FOR REUSE AND STABILIZE WITH TEMPORARY SEED. INSTALL SILT FENCING AROUND STOCKPILE. REMOVE DEBRIS FROM SITE AS NECESSARY.
2 WEEKS	CONSTRUCT BASIN AND APPLY PERMANENT STABILIZATION.
2 WEEKS	CONSTRUCT UNDERGOUND UTILITIES, STORMWATER SYSTEM AND APPROPRIATE SEDIMENT CONTROLS.
8 WEEKS	CONSTRUCT SITE IMPROVEMENTS, INCLUDING BUILDINGS, PARKING/DRIVE AISLE AREAS, ETC.
1 WEEK	REPAIR ANY DISTURBED AREAS IN ACCORDANCE WITH PERMANENT VEGETATIVE COVER STANDARDS.
1 WEEK	REMOVE TEMPORARY EROSION CONTROL MEASURES AND DEMOBILIZE FROM SITE.

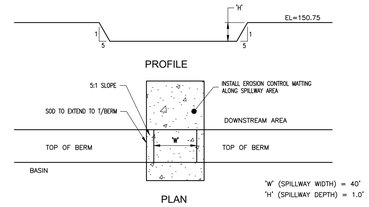

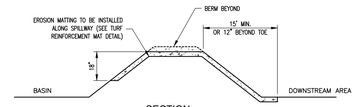

EMERGENCY SPILLWAY DETAIL
N.T.S.

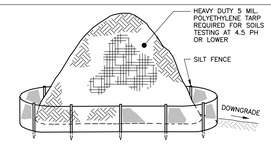

NOTE:
MAXIMUM STOCKPILE HEIGHT NOT TO EXCEED 20 FEET.

TOPSOIL STOCKPILE DETAIL
N.T.S.

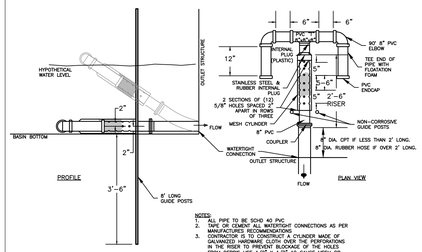

NOTES:
1. ALL PIPE TO BE SCH40 PVC
2. USE FOR SOLID OR WATERTIGHT CONNECTIONS AS PER MANUFACTURER'S RECOMMENDATIONS.
3. CONTRACTOR IS TO CONSTRUCT A CYLINDER MADE OF GALVANIZED HARDWARE CLOTH OVER THE PERFORATIONS IN THE RISER TO PREVENT BLOCKAGE OF THE HOLES FROM DEBRIS USE 1/2" X 1/2" OR GAUGE MESH OR EQUIVALENT. FILL THE SPACE BETWEEN PERFORATED RISER AND MESH ITSELF.
4. FLOATING RISER IS TO BE REMOVED AFTER CONSTRUCTION OF THE BASIN IS DONE SO THAT BASIN CAN FUNCTION PROPERLY FOR DETENTION PURPOSES.

FLOATING SEDIMENT RISER DETAIL
N.T.S.

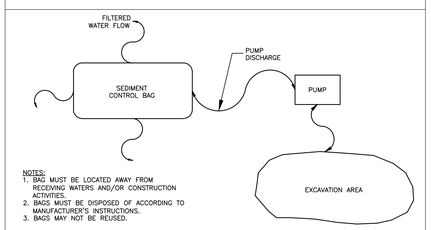

NOTES:
1. BAG MUST BE LOCATED AWAY FROM RECEIVING WATERS AND/OR CONSTRUCTION ACTIVITIES.
2. BAGS MUST BE DISPOSED OF ACCORDING TO MANUFACTURER'S INSTRUCTIONS.
3. BAGS MAY NOT BE REUSED.

SEDIMENT CONTROL BAG FOR DEWATERING
N.T.S.

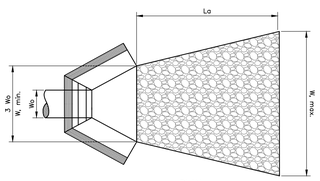

PLAN

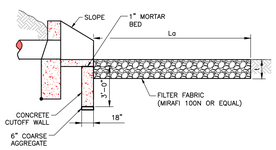

SECTION

RIP-RAP APRON SCHEDULE

OUTLET #	OUTLET PROTECTION				
	APRON LENGTH (Lo)	APRON WIDTH (W)	D_{50}	APRON THICKNESS (T)	FILTER FABRIC REQUIRED
HEADWALL A-1	21.50 FT.	29.00 FT.	6"	12"	YES
HEADWALL B-1	25.00 FT.	34.00 FT.	6"	12"	YES
HEADWALL C-1	20.50 FT.	26.50 FT.	6"	12"	YES
HEADWALL D-2	19.00 FT.	23.50 FT.	9"	12"	YES

RIPRAP CONDUIT OUTLET PROTECTION APRON
N.T.S.

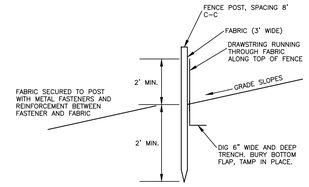

SILT FENCE
N.T.S.

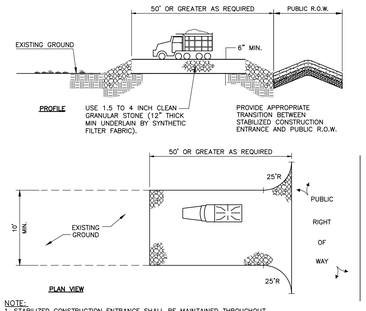

NOTE:
1. STABILIZED CONSTRUCTION ENTRANCE SHALL BE MAINTAINED THROUGHOUT CONSTRUCTION ACTIVITIES.

STABILIZED CONSTRUCTION ENTRANCE
N.T.S.

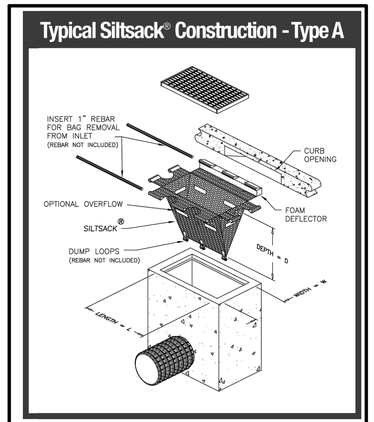

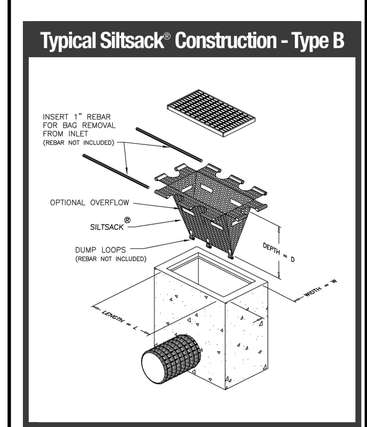

INLET PROTECTION DETAILS
N.T.S.

Dewberry
Dewberry Engineers Inc.
A Dewberry Company
1015 BRIGGS ROAD
SUITE 210
MOUNT LAUREL, NJ 08054
PHONE: (856) 802-0843
FAX: (856) 802-0846
NJ CERTIFICATE OF AUTHORIZATON NO: 24GA28047600

APPLICANT:
WOOD MANAGEMENT, LLC
749 MULLICA HILL ROAD
MULLICA HILL, NJ 08062

PRELIMINARY AND FINAL
MAJOR SITE PLAN
PEACH COUNTRY TRACTOR

BLOCK 14301, LOTS 4 & 7-10
TOWNSHIP OF MONROE
GLOUCESTER COUNTY, NEW JERSEY

WALTER C. BRONSON, JR.
PROFESSIONAL ENGINEER
NJ LIC NO. 24GE03958600

SCALE
AS SHOWN

NO.	DATE	BY	DESCRIPTION

REVISIONS

DRAWN BY	BDJ
APPROVED BY	WCB
CHECKED BY	WCB
DATE	11/25/2020

TITLE
SOIL EROSION & SEDIMENT CONTROL NOTES & DETAILS

PROJECT NO. 50132475

C-502

SHEET NO. 10 OF 10